# PUMPER

## BODY
Medium Aluminum 2nd Gen Pumper

## CHASSIS
Saber FR Chassis

# CHASSIS

## AXLE, FRONT, CUSTOM
20,000 lb Dana Axle

## AXLE, REAR
27,000 lb Dana Axle

## ENGINE
450 HP Cummins L9 Engine

## TRANSMISSION

## BUMPER
19" Extended Stainless Steel

## CAB
6010 Saber FR Cab

# BODY

## WATER TANK
1000 Gallon Poly Water Tank

## COMPT, PUMPER, REAR
51.25" FF Rollup Rear Compt

## COMPT, PUMPER, LEFT SIDE
152" Rollup Full Height Front & Rear FDLER

## COMPT, PUMPER, RIGHT SIDE
152" Rollup Full Height Front & Rear FDLER

# FIRE SUPPRESSION

## PUMPHOUSE
45" Control Zone Top Mount

## PUMP
1500 GPM Waterous CSU

## CROSSLAYS, 1.50"
(2) 1.50" CrossLays Std. Capacity

## CROSSLAYS, 2.50"
2.50" Crosslay Not Required

## SPEEDLAYS
(2) 1.50" W/Tray Std. Capacity

## GENERATOR
Generator Not Required

## Foam System
Husky 3 Single Agent Foam System

## Foam Cell
20 Gallon Foam Cell, Not Reduced Water

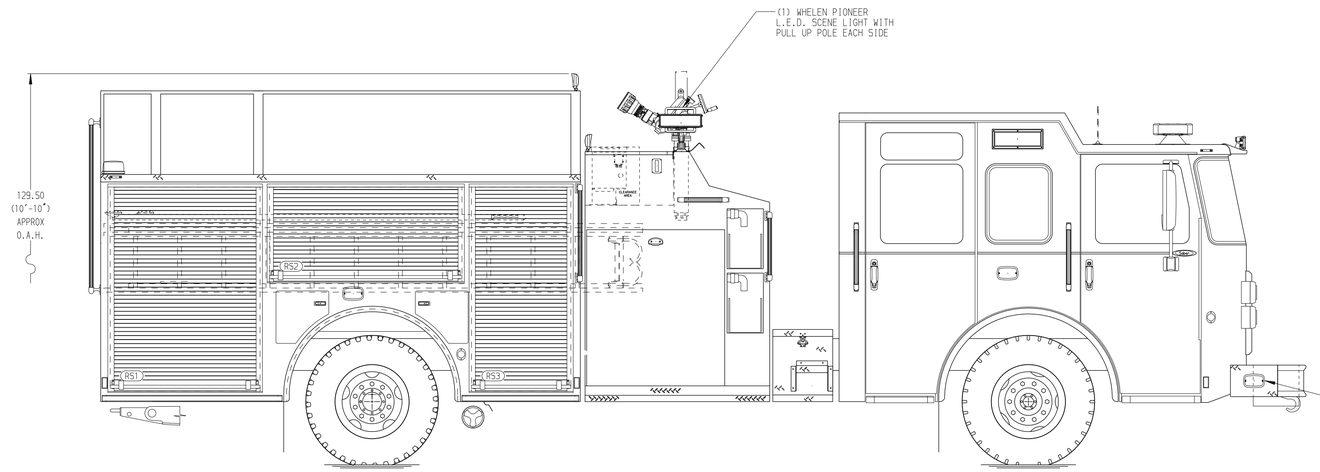


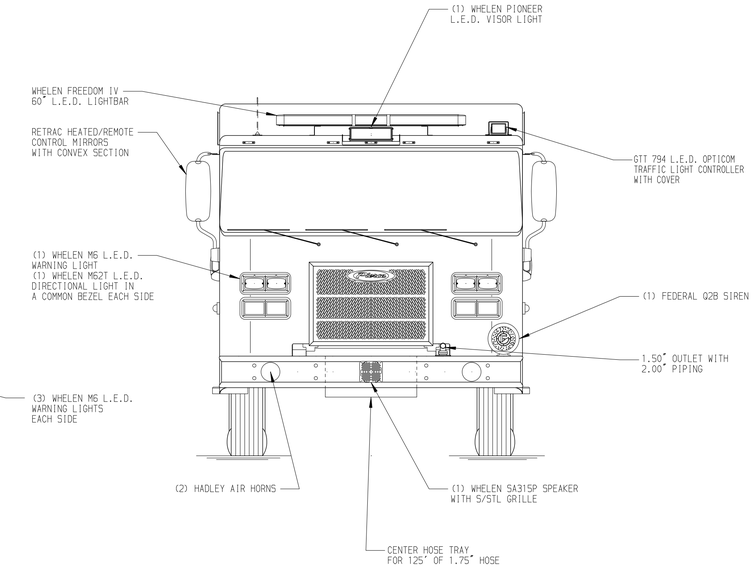


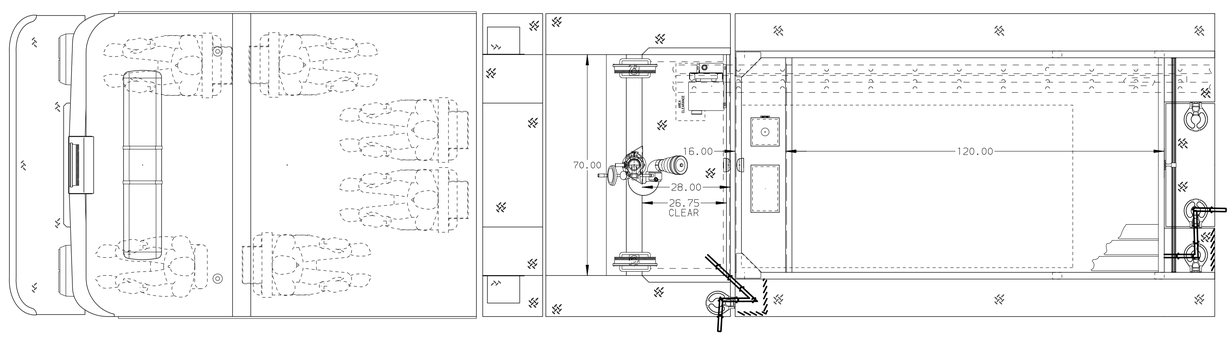


## HOSEBED CAPACITY

**BED 1**
1000' OF 5.00" D.J. POLY HOSE

**BED 2**
1000' OF 3.00" D.J. POLY HOSE

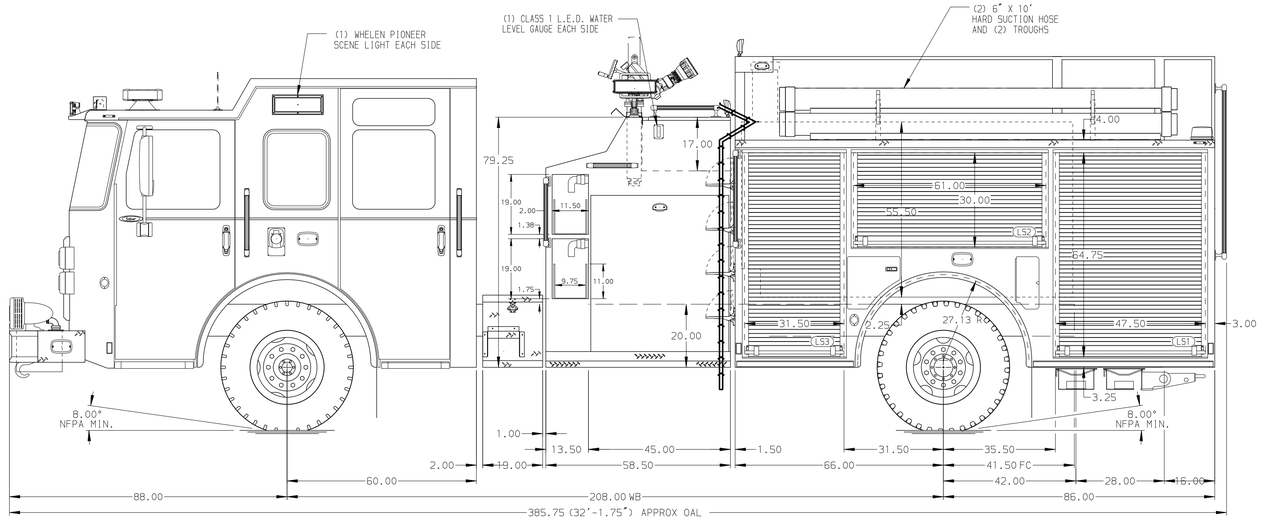


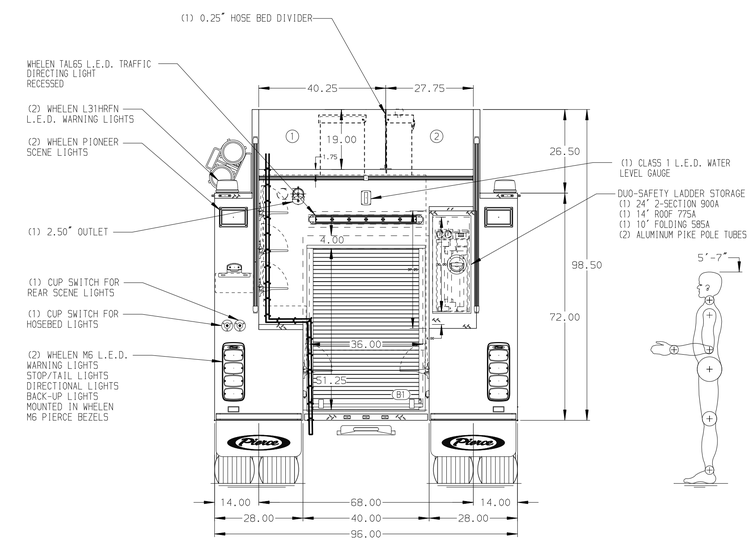


**CUSTOMER APPROVAL**
APPROVED BY: _____
DATE: _____

Pierce MANUFACTURING INC.

| | |
|---|---|
| JOB NO. | 39300 |
| SCALE | 1:24 |
| DATE | |
| TITLE | Pierce Pumper Approval Drawing – |
| FOR | Santa Clara Indian Pueblo – |
| DRAWN BY | MMF |
| CHECKED BY | COL |
| | 05JAN23 |
| | 16JAN23 |
| CHASSIS DATA | |
| MAKE | PIERCE |
| MODEL | SABER FR |
| DWG NO. | 39300AD |
| SHEET SIZE | D |
| SHEET NO. | 1 OF 1 |

| REV | DATE | BY | CH |
|---|---|---|---|
| ▽ | - | - | - |

NOTE
DIMENSIONS SHOWN ARE APPROXIMATE AND ARE SUBJECT TO MINOR DEVIATIONS AS MAY OCCUR OR BE NECESSARY IN CONSTRUCTION.
MINOR DETAILS NOT SHOWN.

View File Created 16-JAN-2023 13:23:49