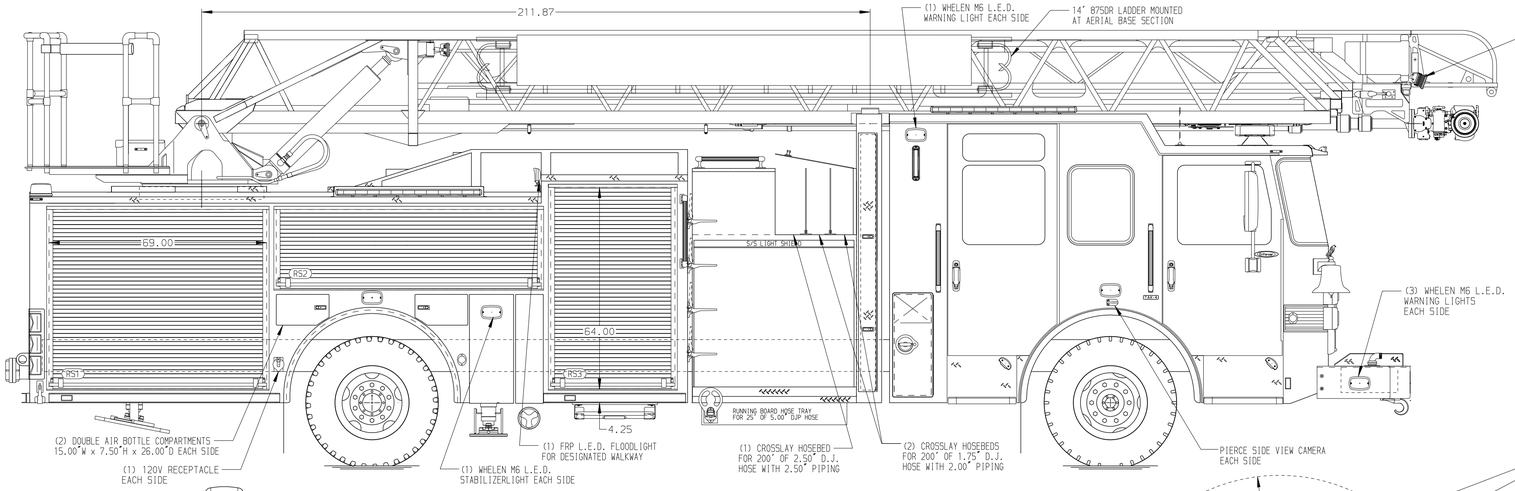

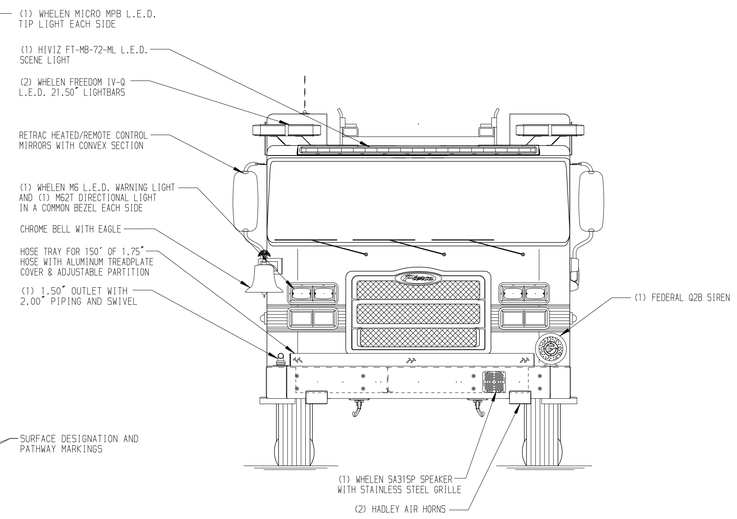

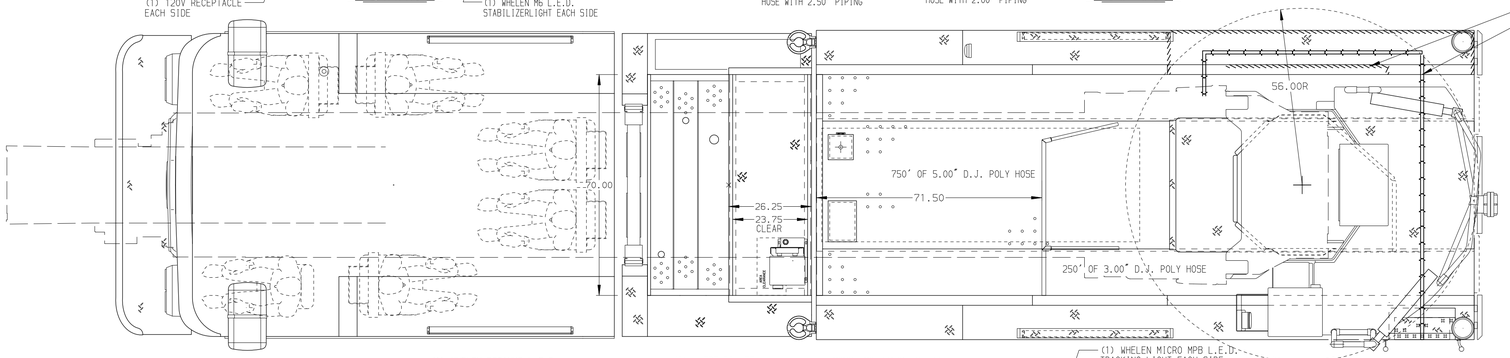

BODY	WATER TANK
107' ASL Aluminum Body	500 Gallon Poly Water Tank
COMPT,LEFT SIDE FRONT	Foam System
Full Height Rollup Forward	Husky 3 Single Agent Foam System
COMPT,LEFT SIDE REAR	Foam Cell
Full Height Rollup Rearward	25 Gallon Foam Cell, Non-Reducing Water
COMPT,RIGHT SIDE FRONT	
Full Height Rollup Forward	
COMPT,RIGHT SIDE REAR	
Full Height Rollup Rearward Large Compt.	

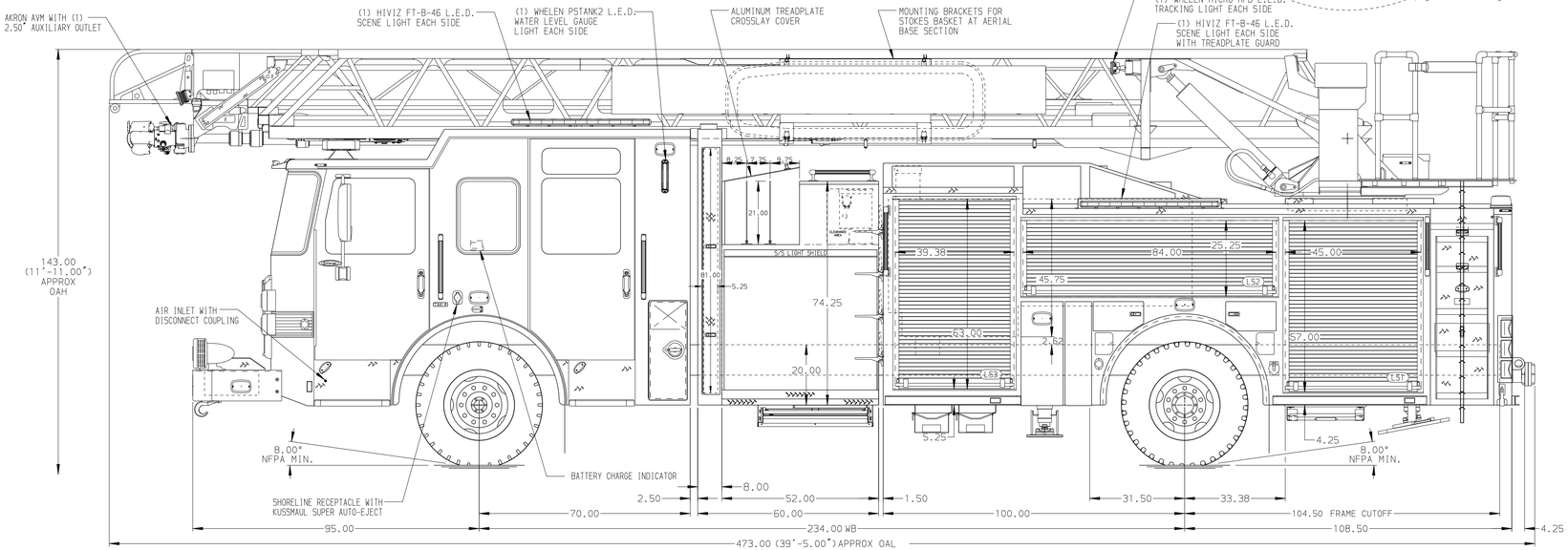

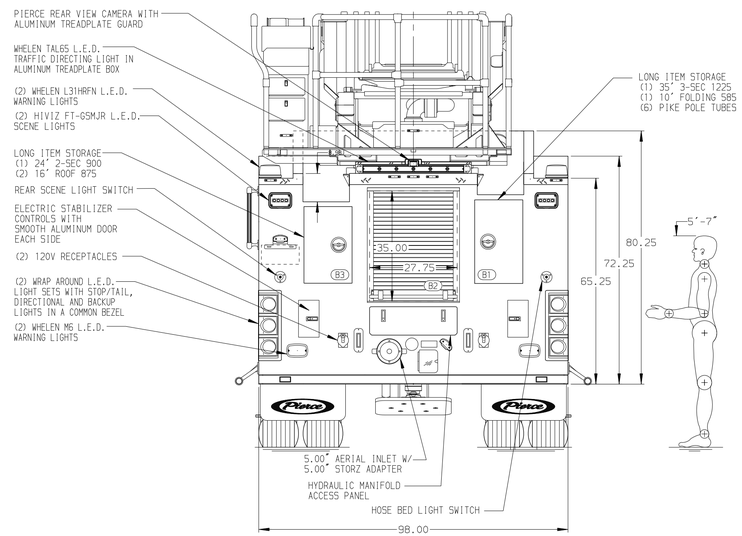

CHASSIS	CAB	AXLE,FRONT,CUSTOM	TRANSMISSION	PUMPHOUSE	CROSSLAYS,1.50"	SPEEDLAYS
Enforcer Chassis	7010 Notched Enforcer Cab	24,000 Lb TAK-4 Axle	ALLison 6th Gen, 3000 EVS P	52" Control Zone Side Mount	(2) 1.50" Standard Capacity	Speedlays Not Required
ENGINE	BUMPER	AXLE,REAR		PUMP	CROSSLAYS,2.50"	GENERATOR
450 HP Cummins L9 Engine	26" Underslung Painted Steel	33,500 Lb Meritor Axle		1500 GPM Waterous CSU	(1) 2.50" Standard Capacity	Harrison 6kW MSV Hydraulic W/Reservoir

NOTE

DIMENSIONS SHOWN ARE APPROXIMATE AND ARE SUBJECT TO MINOR DEVIATIONS AS MAY OCCUR OR BE NECESSARY IN CONSTRUCTION.
MINOR DETAILS NOT SHOWN.

1. BATTERY CHARGER LOCATED BEHIND DRIVER SEAT
2. AERIAL LIMITED RETRACTION NOT REQUIRED
3. DUAL L.E.D. LIGHT STRIPS LOCATED IN COMPARTMENTS PER ORDER
4. EIGHT ADJUSTABLE FULL WIDTH/FULL DEPTH SHELVES LOCATED IN COMPARTMENTS PER ORDER
5. ONE ADJUSTABLE SLIDE-OUT TRAY LOCATED IN COMPARTMENT PER ORDER
6. FOUR FLOOR MOUNTED SLIDE-OUT TRAYS LOCATED IN COMPARTMENTS PER ORDER
7. FOUR POLY MOUNTING BOARDS ON COMPARTMENT BACK WALLS PER ORDER
8. TWO PAC TRAC MOUNTING SYSTEMS ON COMPARTMENT BACK WALLS PER ORDER
9. TWO RECEPTACLES LOCATED IN COMPARTMENTS PER ORDER
10. ONE VERTICAL PARTITION LOCATED IN COMPARTMENT PER ORDER
11. LIFTING EYE ROPE RESCUE ATTACHMENT AT AERIAL TIP
12. TECNIQ RUING LIGHTING AT AERIAL DEVICE
13. 1500 GPM HIGH FLOW WATERWAY
14. 2-WAY INTERCOM SYSTEM BETWEEN AERIAL TIP AND TURNTABLE

REV	DATE	BY	CH
7	20DEC23	ANZ	ZWE
6	29SEP23	ANZ	ZWE

CHASSIS DATA — MAKE: PIERCE — MODEL: ENFORCER

Pierce MANUFACTURING INC.

TITLE: 107' ASCENDANT AERIAL LADDER AND BODY ASSEMBLY
FOR: FERNANDINA BEACH FIRE DEPARTMENT, FERNANDINA BEACH, FL
DWG NO.: 39327AD

JOB NO.	SCALE	DRAWN BY	CHECKED BY	SHEET SIZE	SHEET NO.
39327	1:24	ANZ	NAK	D	1 OF 1

DATE: 31MAY23 — 05JUN23

View File Created 21-DEC-2023 07:00:02