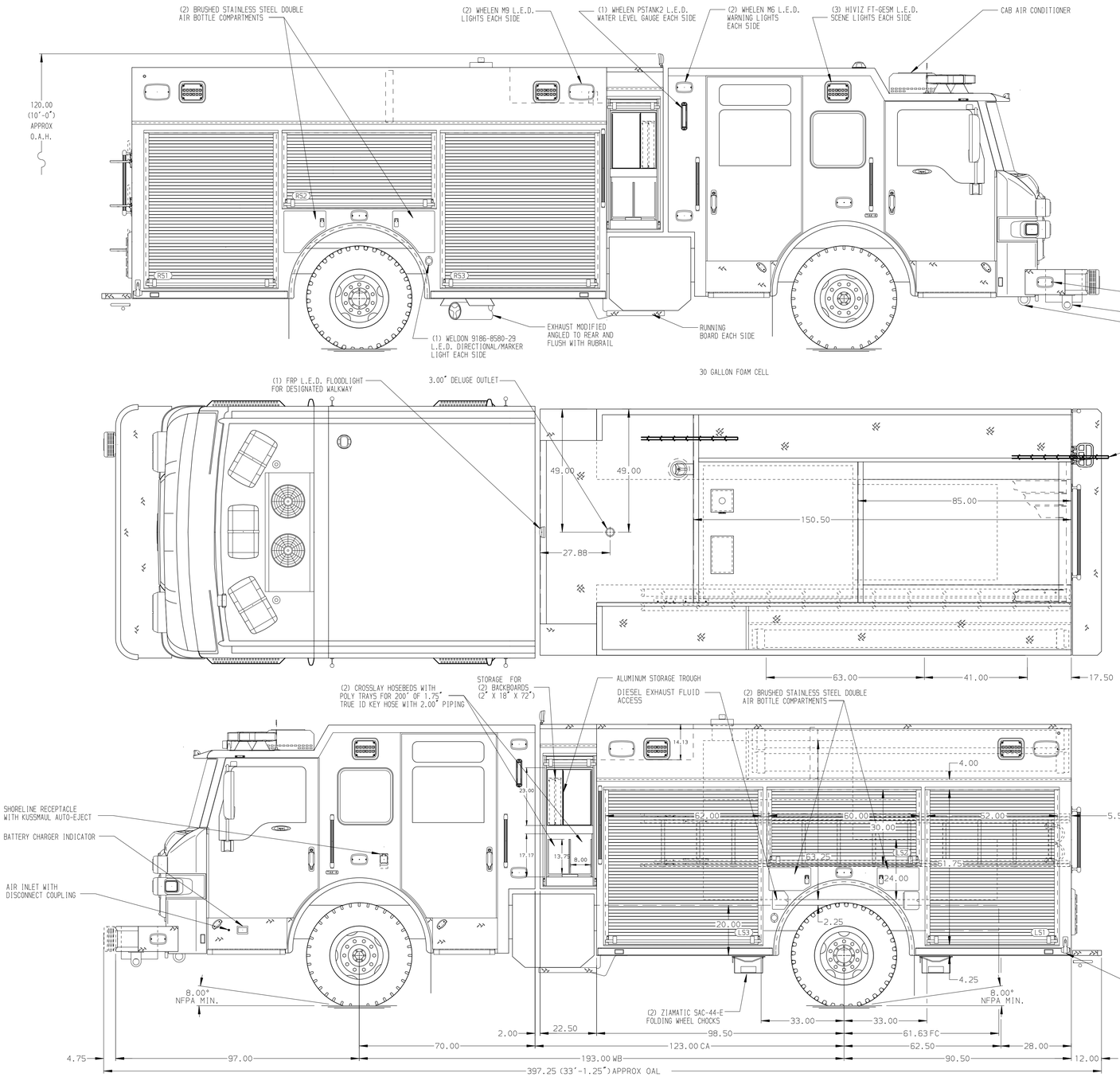

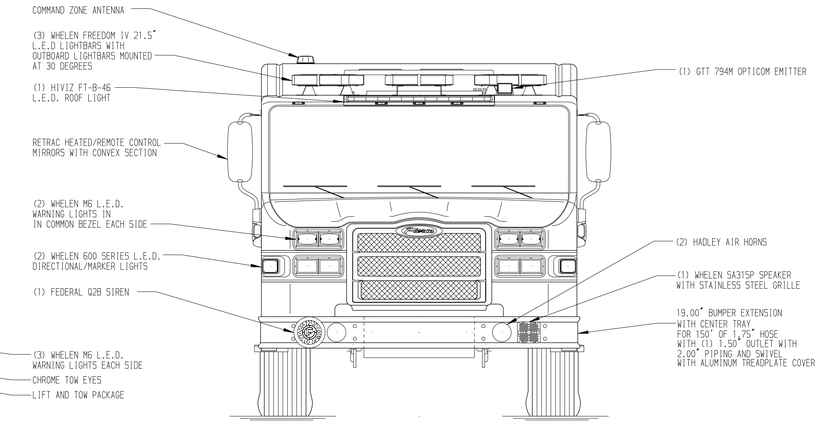

HOSEBED CAPACITIES

1. 300' OF 1.75" D.J. POLY HOSE
2. 200' OF 2.50" D.J. POLY HOSE
3. 1000' OF 5.00" LDH HOSE
4. 700' OF 2.50" D.J. POLY HOSE
5. WALKWAY

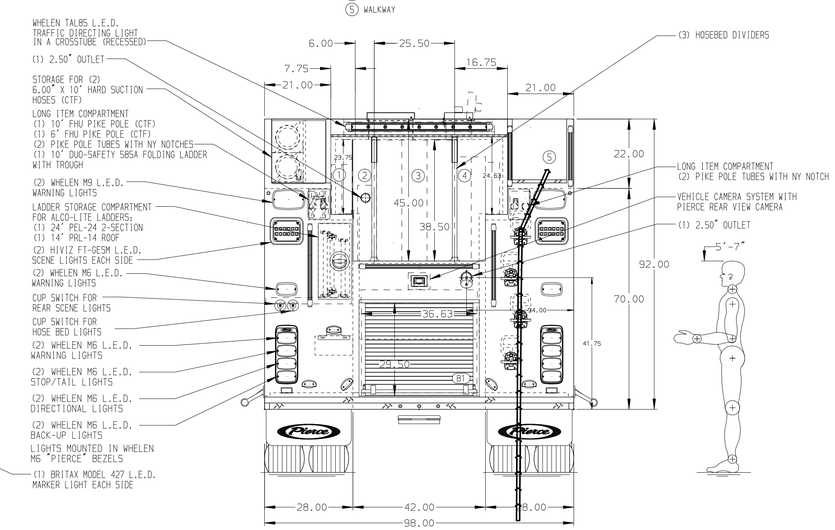

ALUMINUM BODY

NOTE

DIMENSIONS SHOWN ARE APPROXIMATE AND ARE SUBJECT TO MINOR DEVIATIONS AS MAY OCCUR OR BE NECESSARY IN CONSTRUCTION.
MINOR DETAILS NOT SHOWN.

1. KUSSMAUL BATTERY CHARGER LOCATED BEHIND DRIVER'S SEAT

REV	DATE	BY	CH
5	11DEC23	MMF	JJR
4	25AUG23	MMF	JJR

CHASSIS DATA
MAKE: PIERCE
MODEL: IMPEL

Pierce MANUFACTURING INC.

TITLE: 2000-D-780P, 750G WATER-30G FOAM, 189" PUC RESCUE (2) CROSSLAYS, LADDERS THRU BODY, DELUGE
FOR: SEMINOLE COUNTY FIRE DEPARTMENT SANFORD, FLORIDA
DWG NO.: 39328AD-SH1

JOB NO.	39328 01-03
SCALE	1:24
DATE	
DRAWN BY	MMF
DATE	06JUN23
CHECKED BY	COL
	-
SHEET SIZE	D
SHEET NO.	1 OF 2

View File Created 11-DEC-2023 14:54:14