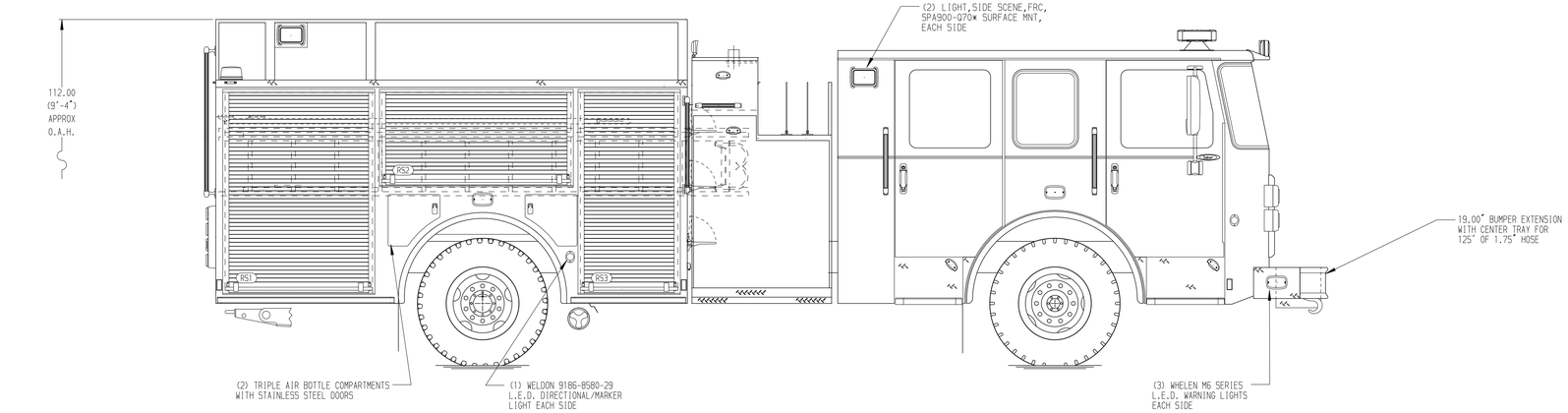

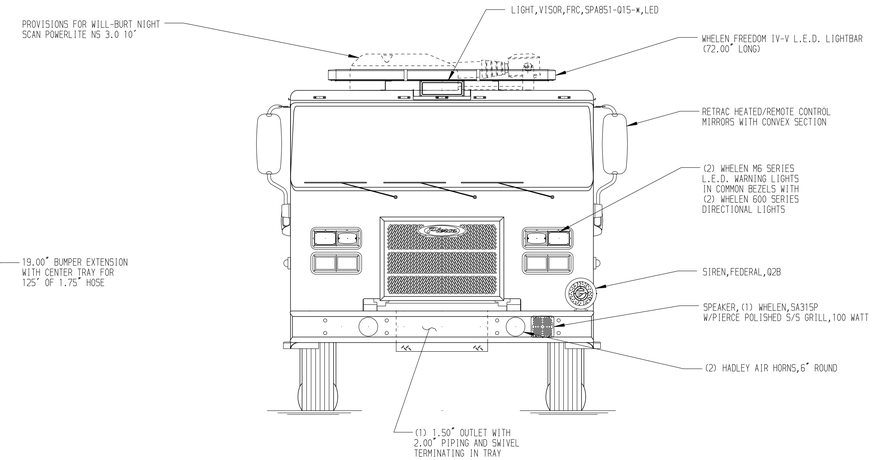

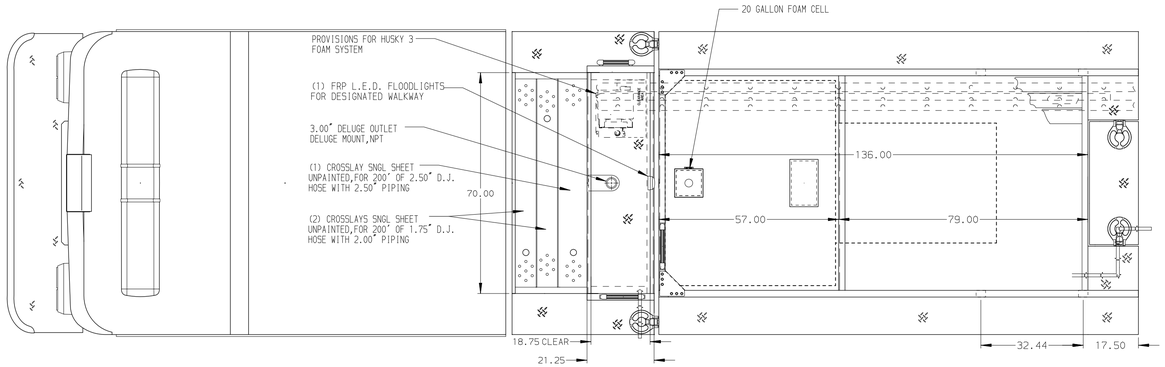

HOSEBED CAPACITIES

1. 1000' OF 5.00" D.J.POLY HOSE
2. 500' OF 2.50" D.J.POLY HOSE

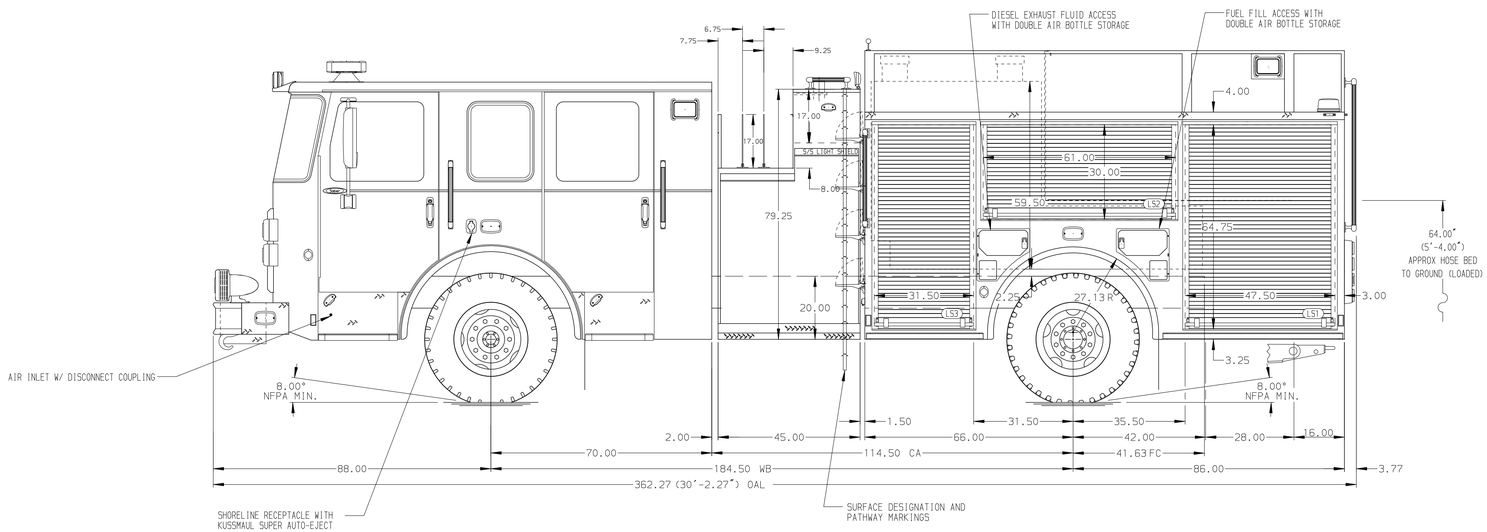

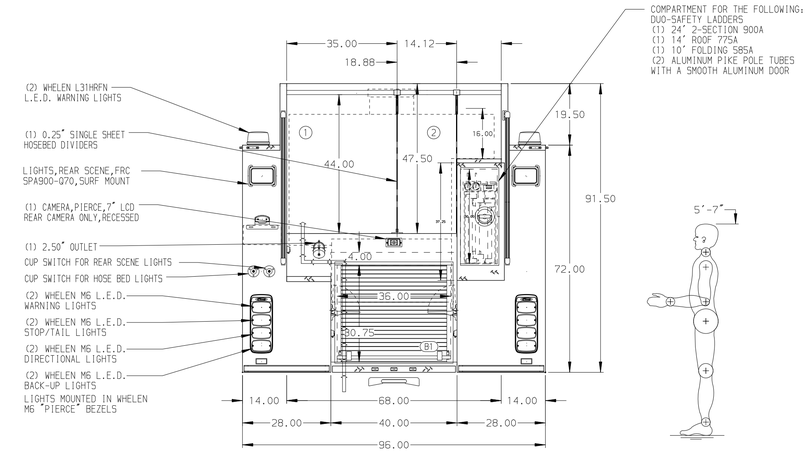

ALUMINUM BODY

NOTE

DIMENSIONS SHOWN ARE APPROXIMATE AND ARE SUBJECT TO MINOR DEVIATIONS AS MAY OCCUR OR BE NECESSARY IN CONSTRUCTION.
MINOR DETAILS NOT SHOWN.

REV	DATE	BY	CH
▽	-	-	-

CHASSIS DATA — MAKE: PIERCE — MODEL: SABER FR

Pierce MANUFACTURING INC.
BRADENTON, FLORIDA

TITLE: 1500-D-750P,730G WATER 20G FOAM,152"NEW YORK STYLE PUMPER,(2) CROSSLAYS, 45" PUMPHOUSE, DELUGE

FOR: PIERCE FIELD UNIT
BRADENTON, FLORIDA

DWG NO.: 39384AD

JOB NO.	SCALE	DRAWN BY	CHECKED BY	SHEET SIZE	SHEET NO.
39384	1:24	JLA	CGA	D	1 OF 1

DATE: 17JAN23 — 19JAN23

View File Created 19-JAN-2023 11:54:45