PUMPER

BODY
Long Aluminum 2nd Gen Pumper

CHASSIS
Saber FR Chassis

CHASSIS

AXLE,FRONT,CUSTOM
20,000 lb Dana Axle

AXLE,REAR
27,000 lb Meritor Axle

ENGINE
450 HP Cummins L9 Engine

TRANSMISSION
Allison 5th Gen, 3000 EVS P

BUMPER
19" Extended Stainless Steel

CAB
7010 Saber FR Cab

BODY

WATER TANK
980 Gallon Poly Water Tank

COMPT,PUMPER,REAR
44.50" FF Rollup Rear Compt

COMPT,PUMPER,LEFT SIDE
161" Rollup Full Height Front & Rear FDLER

COMPT,PUMPER,RIGHT SIDE
161" Rollup Full Height Front & Rear FDLER

FIRE SUPPRESSION

PUMPHOUSE
52" Control Zone Side Mount

PUMP
1500 GPM Waterous CSU

CROSSLAYS,1.50"
(2) 1.50" Standard Capacity

CROSSLAYS,2.50"
(1) 2.50" Standard Capacity

SPEEDLAYS
Speedlays Not Required

GENERATOR
Generator Not Required

Foam System
FoamPro 1600,(Single Agent)

Foam Cell
20 Gallon Foam Cell, Reduced Water

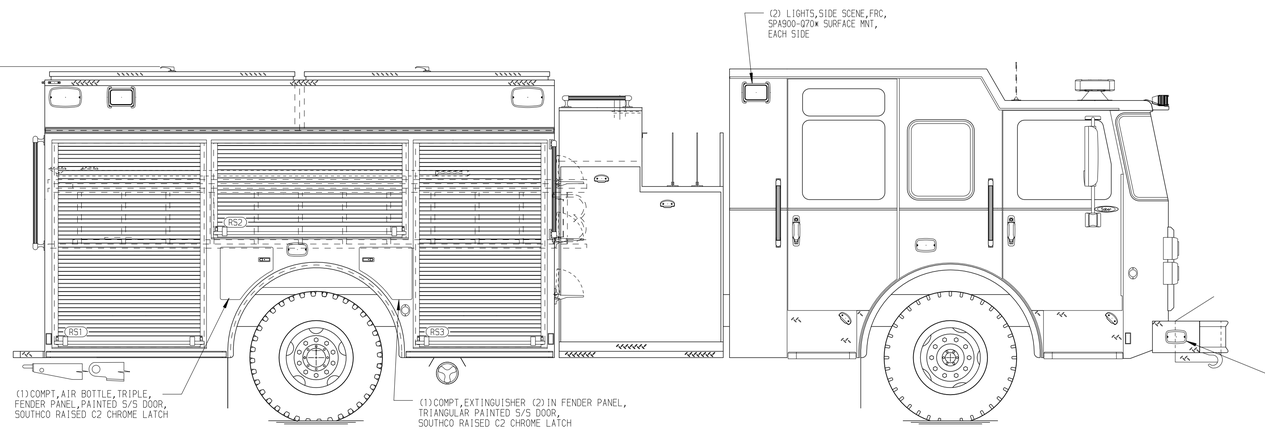

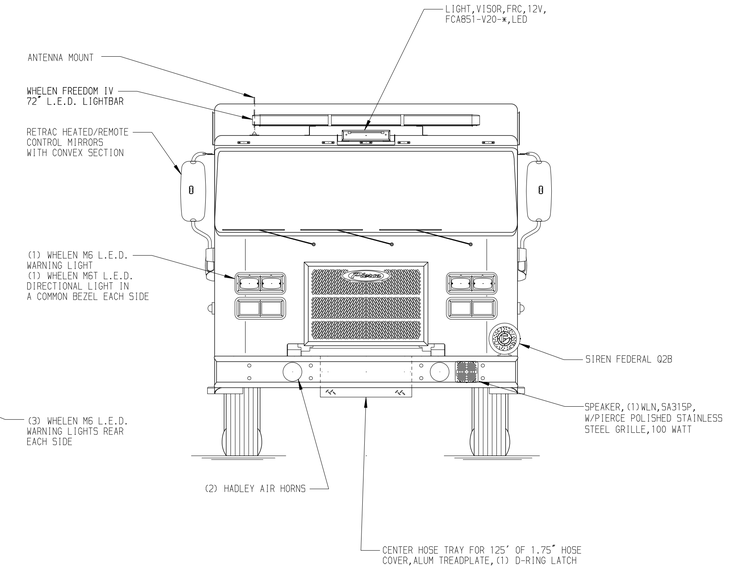

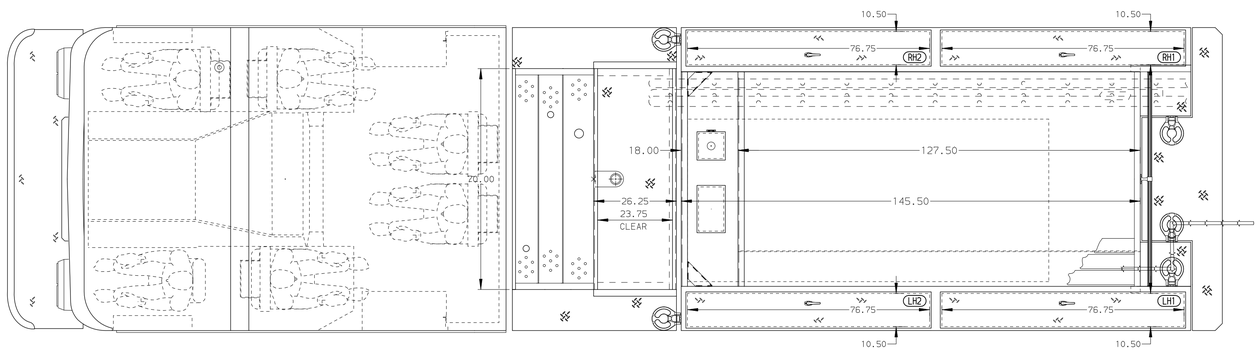

HOSEBED CAPACITY

BED 1
300' OF 2.50" D.J. POLY HOSE

BED 2
1000' OF 5.00" D.J. POLY HOSE

BED 3
300' OF 2.50" D.J. POLY HOSE

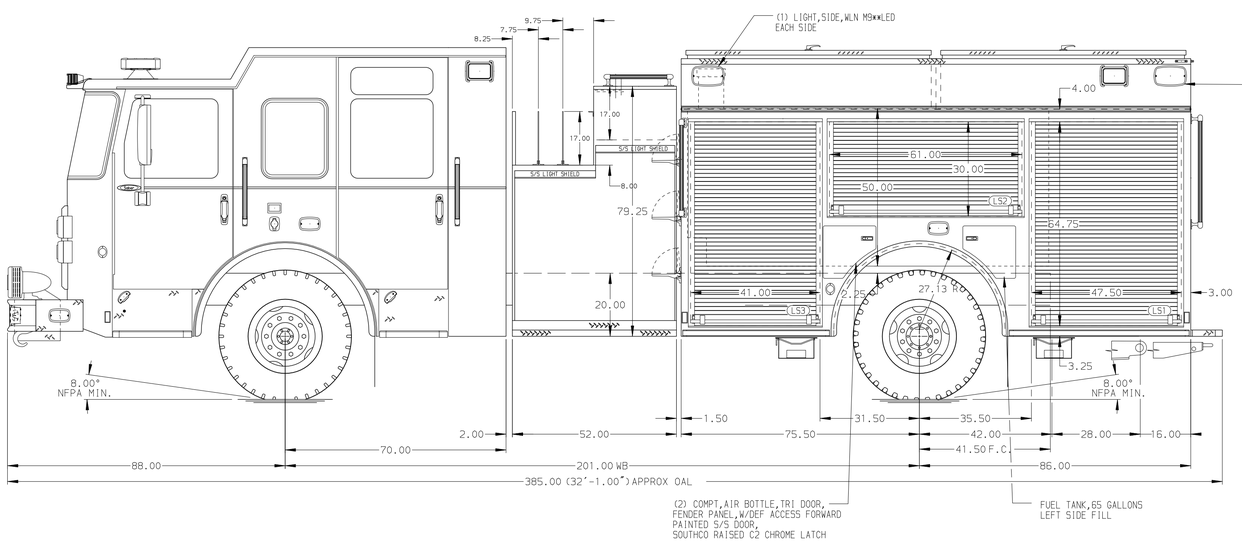

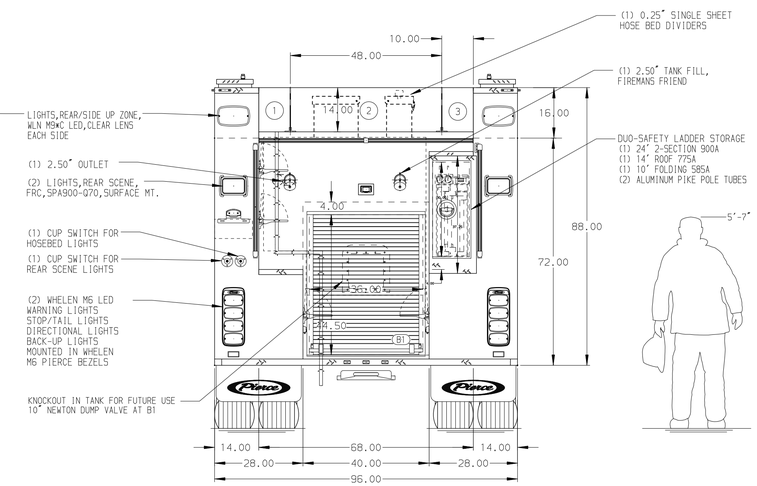

NOTE

DIMENSIONS SHOWN ARE APPROXIMATE AND ARE SUBJECT TO MINOR DEVIATIONS AS MAY OCCUR OR BE NECESSARY IN CONSTRUCTION.
MINOR DETAILS NOT SHOWN.

1. ONE 1.50 OUTLET WITH 2.00 PIPING AND SWIVEL LOCATED IN CENTER BUMPER TRAY
2. SHORELINE RECEPTACLE WITH KUSSMAUL SUPER AUTO-EJECT LOCATED ON DRIVER SIDE OF THE CAB
3. AIR INLET WITH DISCONNECT COUPLING IN THE DRIVER SIDE STEPWELL
4. BATTERY CHARGER LOCATED IN COMPARTMENT PER SHOP ORDER
5. BATTERY CHARGE INDICATOR LOCATED ON THE DRIVER SIDE SEAT RISER
6. ADJUSTABLE SHELVES IN COMPARTMENTS PER SHOP ORDER
7. ONE FLOOR MOUNTED SLIDE-OUT TRAY IN COMPARTMENT PER SHOP ORDER
8. MOUNTING PROVISIONS FOR FRONT INLET
9. MOUNTING PROVISIONS FOR WILL BURT NIGH SCAN POWERLITE NS 3.0 10' ON CAB

REV	DATE	BY	CH
-	-	-	-

CHASSIS DATA	TITLE	Pierce Pumper Approval Drawing -	JOB NO. 39402
MAKE PIERCE	FOR	PIERCE FIELD UNIT -	SCALE 1:24 / DATE
MODEL SABER FR	DWG NO.	39402AD	DRAWN BY RHU / 26JAN23
			CHECKED BY CGA / 27JAN23
			SHEET SIZE D / SHEET NO. 1 OF 1

Pierce MANUFACTURING INC.

View File Created 27-JAN-2023 06:55:10