PUMPER

BODY
Long Aluminum 2nd Gen Pumper

CHASSIS
Enforcer Chassis

CHASSIS

AXLE, FRONT, CUSTOM
22,800 lb TAK-4 Axle

AXLE, REAR
27,000 lb Meritor Axle

ENGINE
525 HP Cummins X12 Engine

TRANSMISSION
Allison 6th Gen, 4500 EVS P

BUMPER
19" Extended Painted Steel

CAB
7000 Enforcer Cab

BODY

WATER TANK
1000 Gallon New York Style Water Tank

COMPT, PUMPER, REAR
30.75" FF RollUp Rear Compt

COMPT, PUMPER, LEFT SIDE
161" Lap Full Height Front & Rear FDLER

COMPT, PUMPER, RIGHT SIDE
161" Lap Low FDLER

FIRE SUPPRESSION

PUMPHOUSE
48" Control Zone Side Mount

PUMP
1500 GPM Waterous CSU

CROSSLAYS, 1.50"
(2) 1.50" Standard Capacity

CROSSLAYS, 2.50"
2.50" Crosslay Not Required

SPEEDLAYS
Speedlays Not Required

GENERATOR
Not Required

Foam System
Foam System Not Required

Foam Cell
Foam Cell Not Required

Side Roll and Frontal Impact Protection

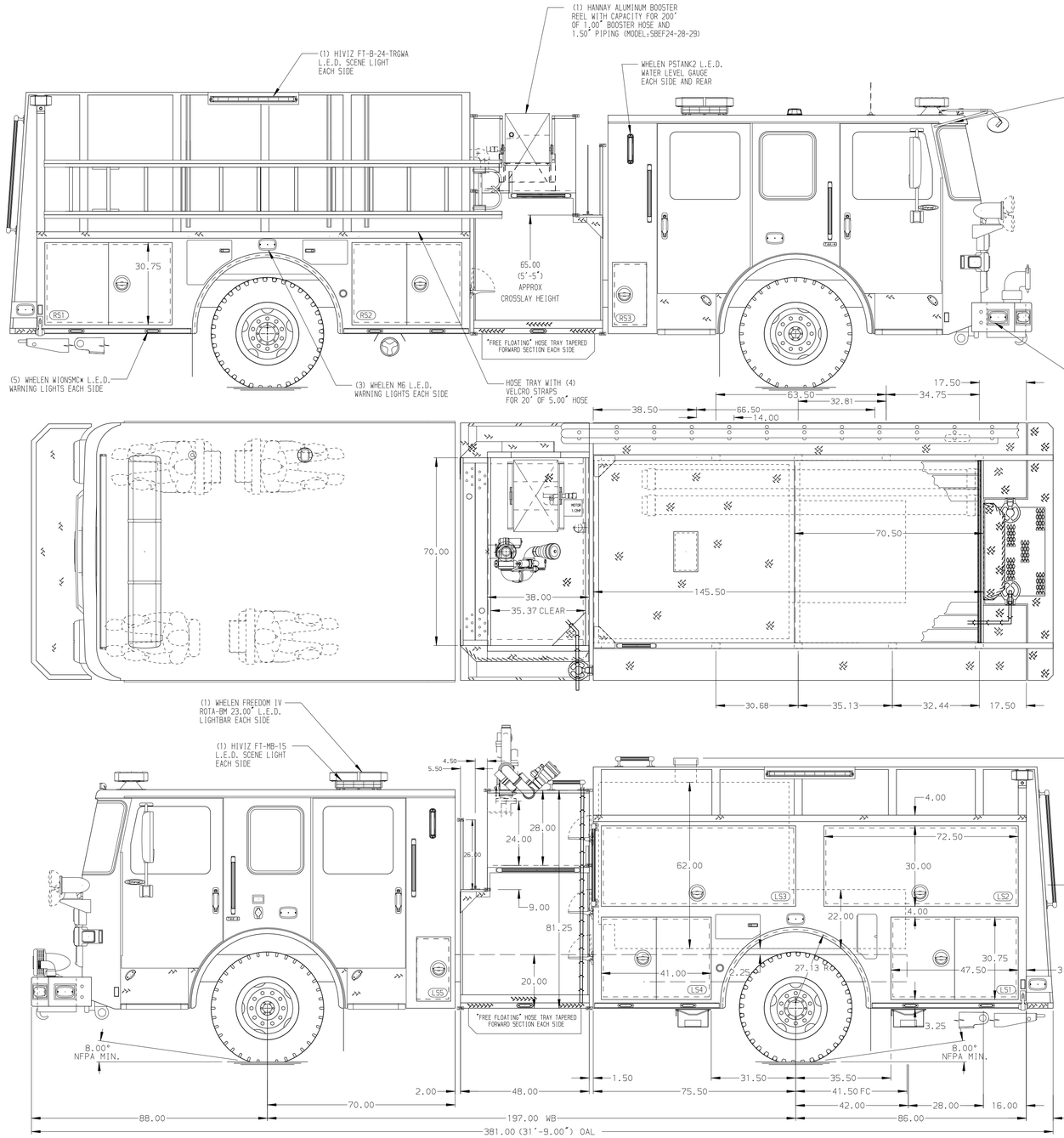

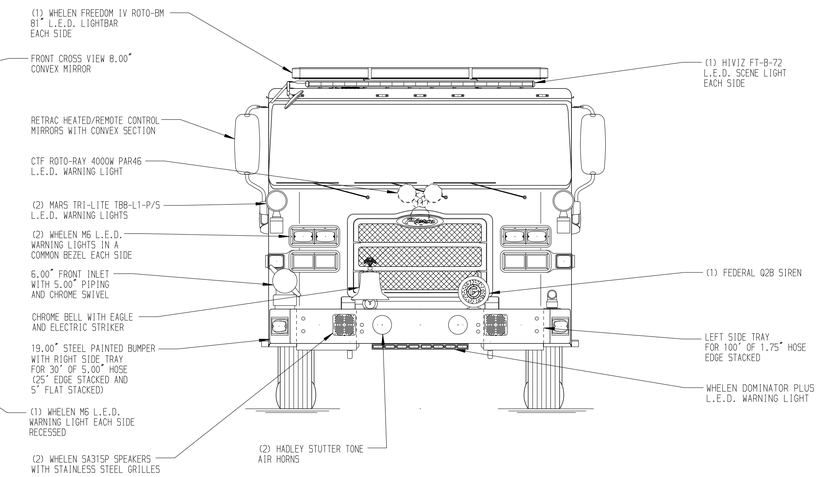

HOSEBED CAPACITY

BED 1
200' OF 2.50" D.J. POLY HOSE

BED 2
200' OF 2.50" D.J. POLY HOSE

BED 3
1200' OF 4.00" D.J. POLY HOSE

BED 4
400' OF 1.75" D.J. POLY HOSE

BED 5
300' OF 2.50" D.J. POLY HOSE

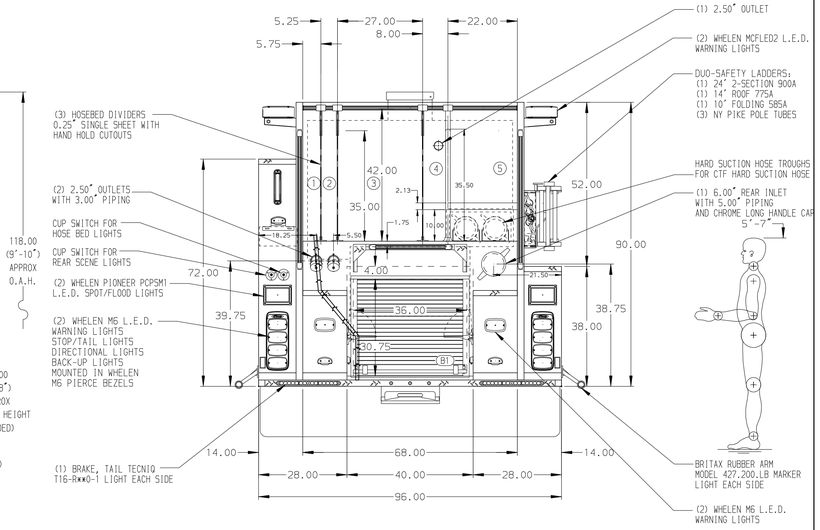

Pierce MANUFACTURING INC.

JOB NO.	39406				
SCALE 1:24	DATE				
DRAWN BY MMF	03APR23				
CHECKED BY COL	04APR23				
SHEET SIZE D	SHEET NO. 1 OF 1				

TITLE: Pierce Pumper Approval Drawing
FOR: VAMC Martinsburg
DWG NO.: 39406AD

NOTE
DIMENSIONS SHOWN ARE APPROXIMATE AND ARE SUBJECT TO MINOR DEVIATIONS AS MAY OCCUR OR BE NECESSARY IN CONSTRUCTION.
MINOR DETAILS NOT SHOWN.

1. ONE 2.50 OUTLET WITH 2.50 PIPING AND SWIVEL LOCATED ON TOP BUMPER LEFT SIDE
2. SHORELINE RECEPTACLE WITH KUSSMAUL SUPER AUTO-EJECT LOCATED ON DRIVER SIDE OF THE CAB
3. AIR INLET/OUTLET WITH DISCONNECT COUPLING LOCATED ON THE DRIVER SIDE PUMP PANEL
4. BATTERY CHARGER LOCATED PER ORDER
5. BATTERY CHARGE INDICATOR LOCATED ON THE DRIVER SIDE OF THE CAB
6. ADJUSTABLE SHELVES LOCATED PER ORDER
7. ONE SWING-OUT TOOLBOARD LOCATED PER ORDER

REV	DATE	BY	CH
7	30JAN24	MMF	JLL
6	08AUG23	WRE	JLL
5	22JUN23	MMF	JLL
4	01JUN23	MMF	JLL

CHASSIS DATA
MAKE: PIERCE
MODEL: ENFORCER

View File Created 30-JAN-2024 14:07:46