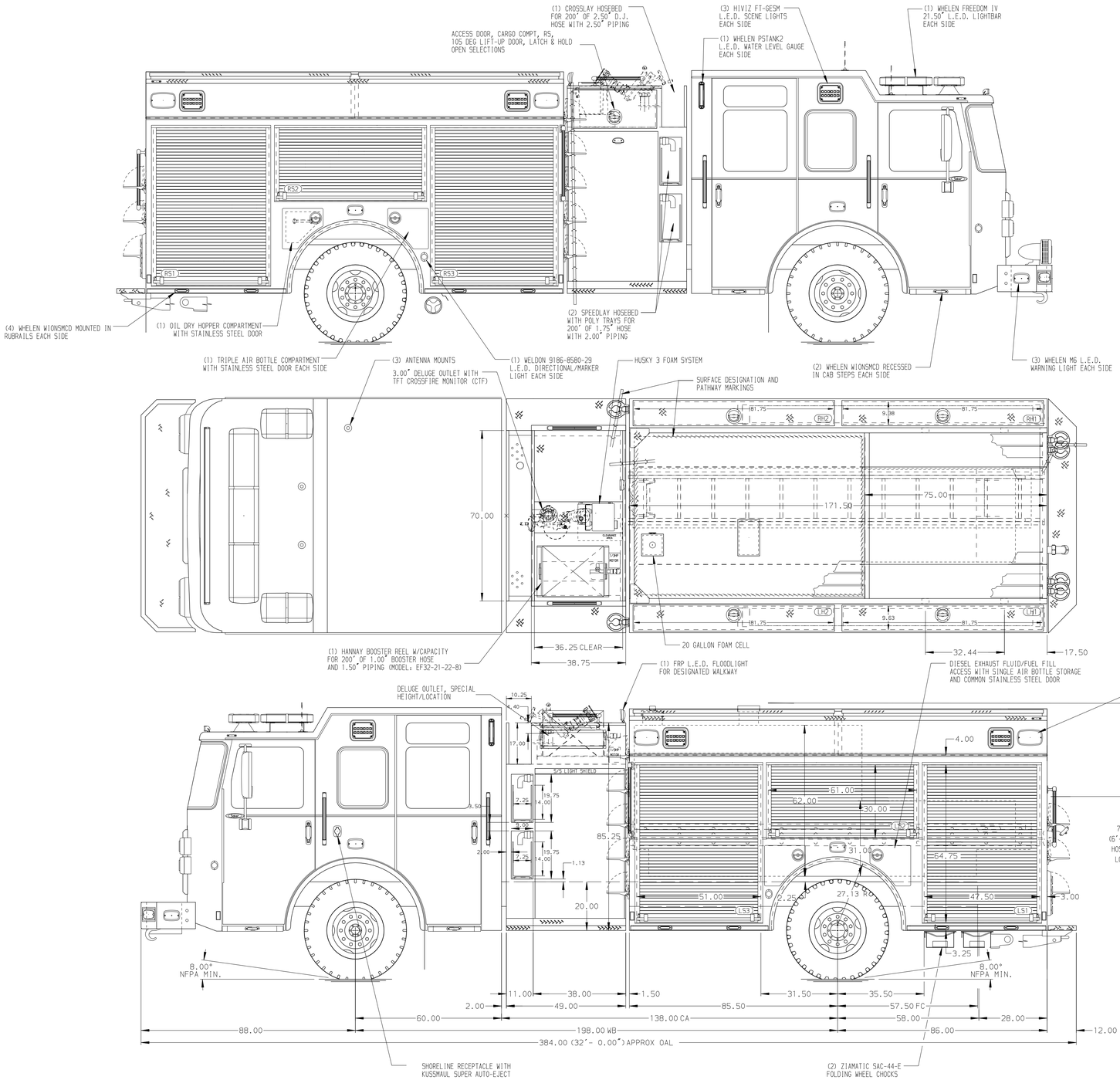

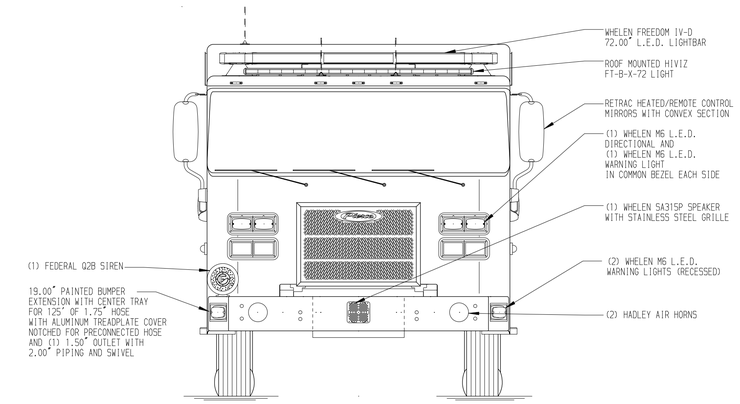

HOSEBED CAPACITIES

1. 200' OF 2.50" D.J. POLY HOSE
2. 200' OF 1.75" D.J. POLY HOSE
3. 200' OF 1.75" D.J. POLY HOSE
4. 800' OF 4.00" D.J. POLY HOSE
5. 200' OF 4.00" D.J. POLY HOSE

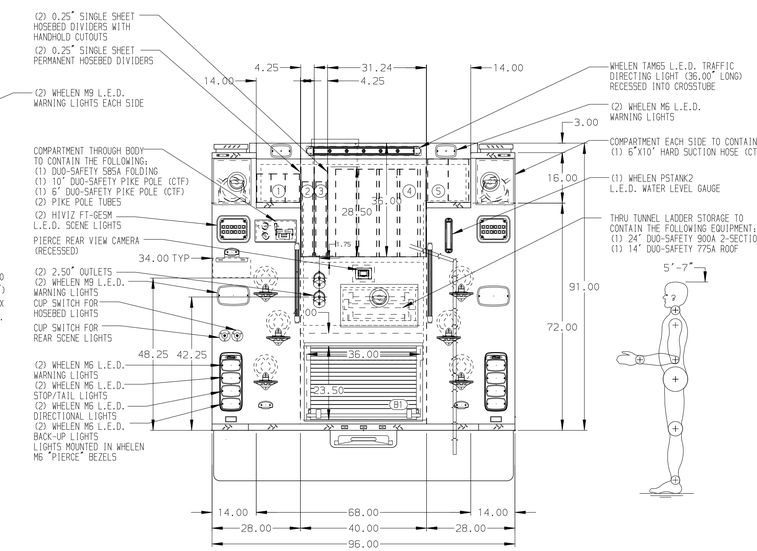

ALUMINUM BODY

MAXIMUM O.A.H. 116.00"

NOTE

DIMENSIONS SHOWN ARE APPROXIMATE AND ARE SUBJECT TO MINOR DEVIATIONS AS MAY OCCUR OR BE NECESSARY IN CONSTRUCTION.
MINOR DETAILS NOT SHOWN.

REV	DATE	BY	CH
7	16AUG23	VHO	CCS
6	06JUN23	KLE	CCS
5	14APR23	CDU	CZA

CHASSIS DATA
MAKE: PIERCE
MODEL: SABER FR

Pierce MANUFACTURING INC.

TITLE: 1500-D-1000P, 980 GAL OF WATER W/ 20 GAL FOAM CELL 171" FH FD BODY, LADDERS THRU TANK, DELUGE

FOR: PRATT VOLUNTEER FIRE DEPARTMENT
PRATT, WEST VIRGINIA

DWG NO.: 39439AD

JOB NO.	39439
SCALE	1:24
DATE	
DRAWN BY	KLE
04MAY23	
CHECKED BY	CDU
05APR23	
SHEET SIZE	D
SHEET NO.	1 OF 1

View File Created 18-AUG-2023 07:10:14