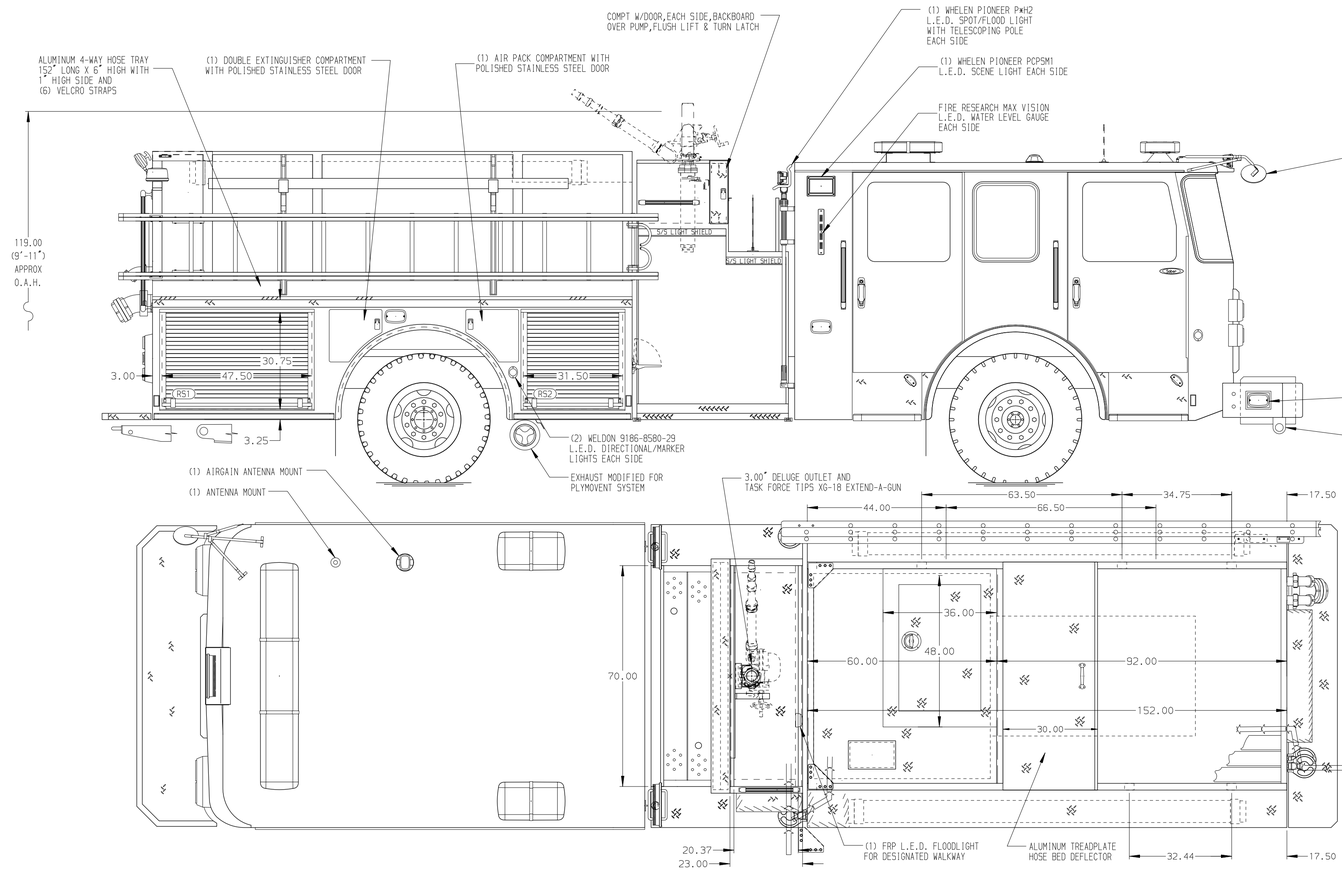

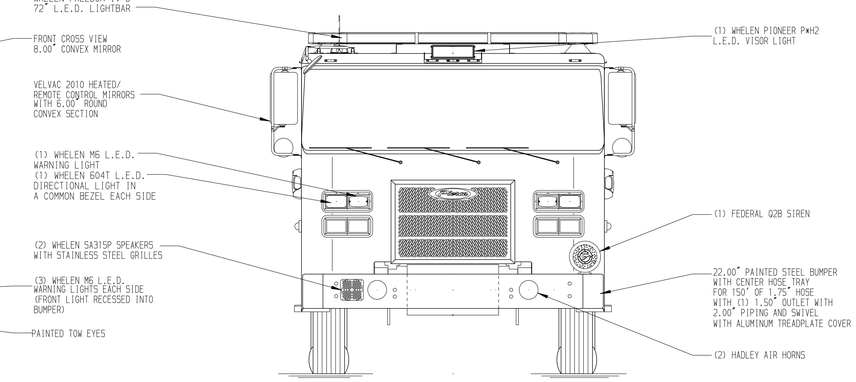

HOSEBED CAPACITIES

1. 1000' OF 5.00" D.J. POLY HOSE
2. 900' OF 2.50" D.J. POLY HOSE
3. 300' OF 2.50" D.J. POLY HOSE
4. 250' OF 1.88" D.J. POLY HOSE

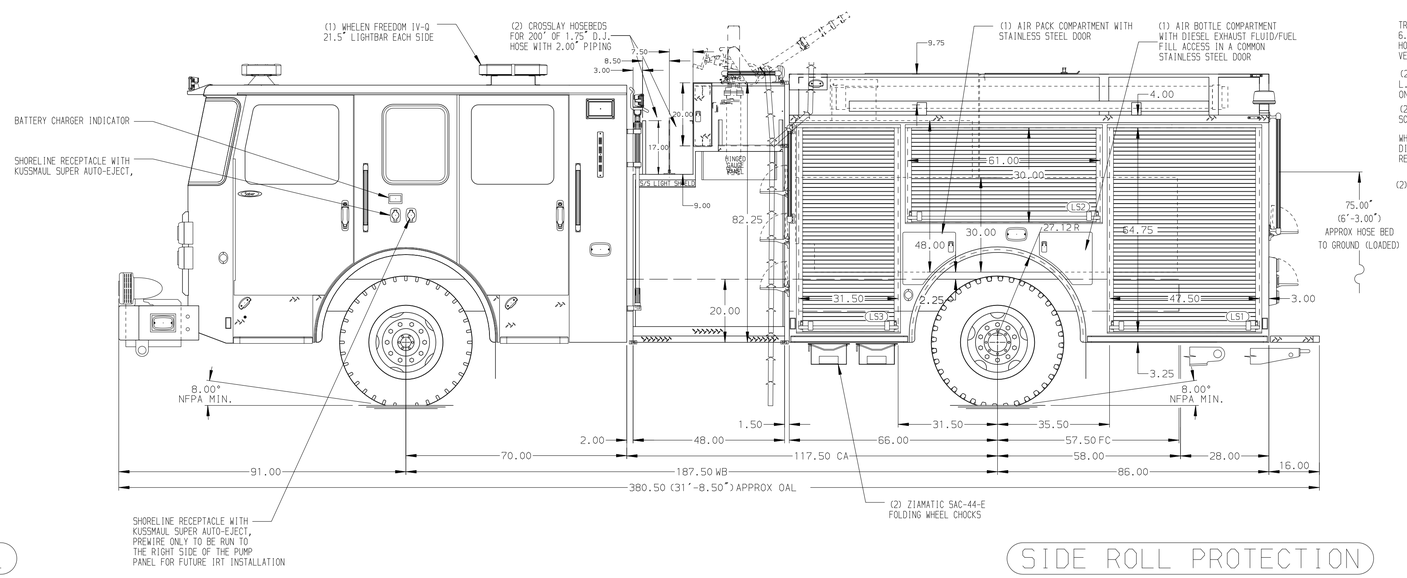

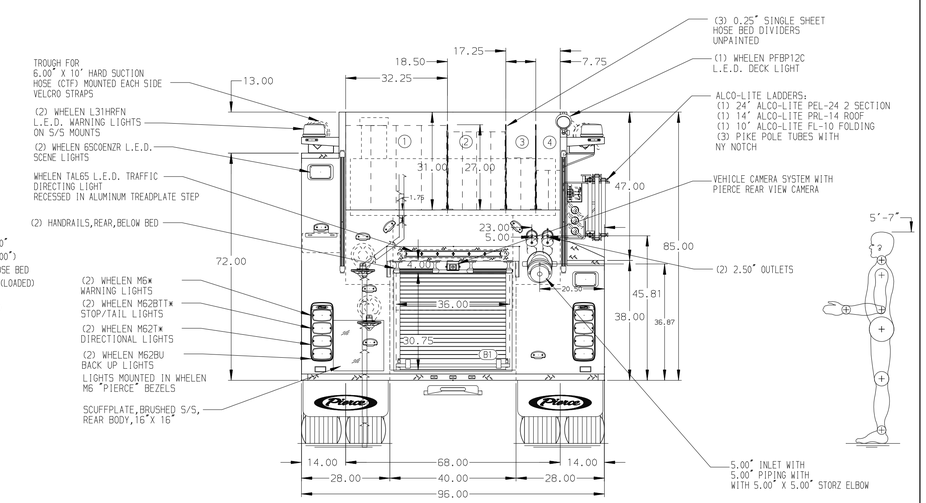

GALVANNEAL

SIDE ROLL PROTECTION

NOTE

DIMENSIONS SHOWN ARE APPROXIMATE AND ARE SUBJECT TO MINOR DEVIATIONS AS MAY OCCUR OR BE NECESSARY IN CONSTRUCTION.
MINOR DETAILS NOT SHOWN.

REV	DATE	BY	CH
D	23JAN24	RWR	NAS
C	11SEP23	RWR	NAS
B	17JUL23	RHU	NAS
A	14APR23	BTH	PHA

CHASSIS DATA — MAKE: PIERCE — MODEL: SABER FR

Pierce MANUFACTURING INC.

TITLE: 1500-D-750P, 750G WATER, 152" FH FDLER LS, FDLER RS (3) X-LAYS, DELUGE, LADDER BRACKETS

FOR: CHARLESTON FIRE DEPARTMENT, CHARLESTON, SOUTH CAROLINA

DWG NO.: 39454AD

JOB NO.	39454
SCALE	1:24
DATE	
DRAWN BY	BTH 07APR23
CHECKED BY	PHA 07APR23
SHEET SIZE	D
SHEET NO.	1 OF 1

View File Created 23-JAN-2024 10:13:13