PUMPER

BODY
Long Aluminum 2nd Gen Pumper

CHASSIS
Enforcer Chassis

CHASSIS

AXLE,FRONT,CUSTOM
19,500 Lb TAK-4 Axle

AXLE,REAR
27,000 Lb Meritor Axle

ENGINE
450 HP Cummins L9 Engine

TRANSMISSION
Allison 6th Gen, 3000 EVS P

BUMPER
22" Extended Stainless Steel

CAB
7010 Enforcer Cab

BODY

WATER TANK
1000 Gallon Poly Water Tank

COMPT,PUMPER,REAR
23.50" FF RollUp Rear Compt

COMPT,PUMPER,LEFT SIDE
171" RollUp Full Height & Depth Front & Rear

COMPT,PUMPER,RIGHT SIDE
171" RollUp Full Height & Depth Front & Rear

FIRE SUPPRESSION

PUMPHOUSE
45" Control Zone Side Mount

PUMP
1500 GPM Hale QMAX

CROSSLAYS,1.50"
1.50" Crosslays Not Required

CROSSLAYS,2.50"
2.50" Crosslay Not Required

SPEEDLAYS
(2) 1.50" W/Tray Std. Capacity
(1) 2.50" W/Tray Std. Capacity

GENERATOR
Generator Not Required

Foam System
Foam System Not Required

Foam Cell
Foam Cell Not Required

Side Roll and Frontal Impact Protection

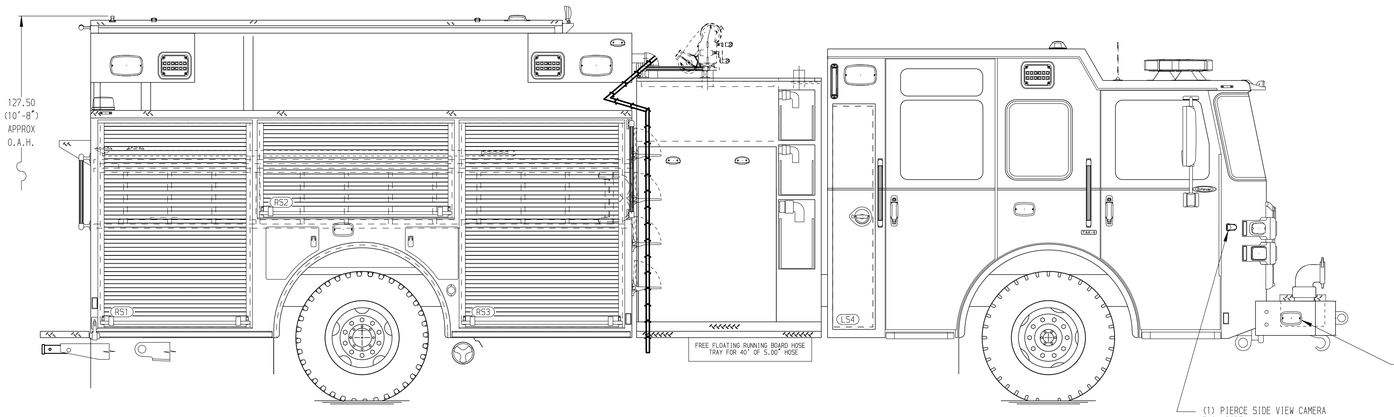

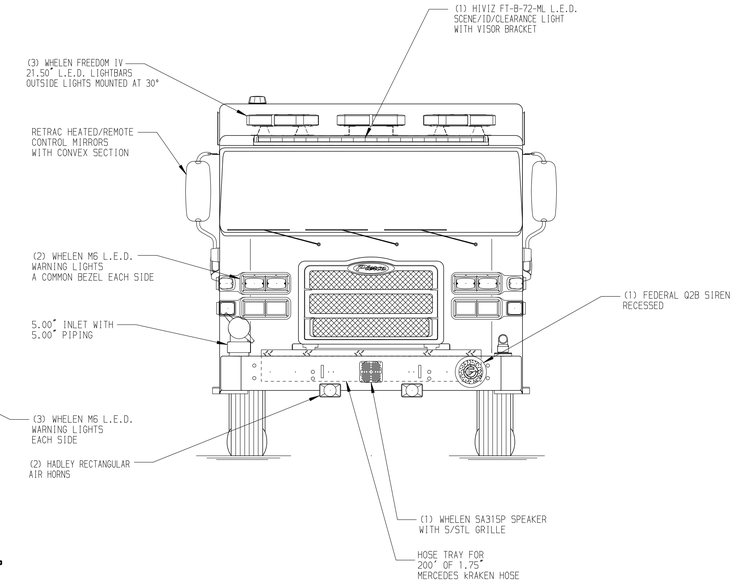

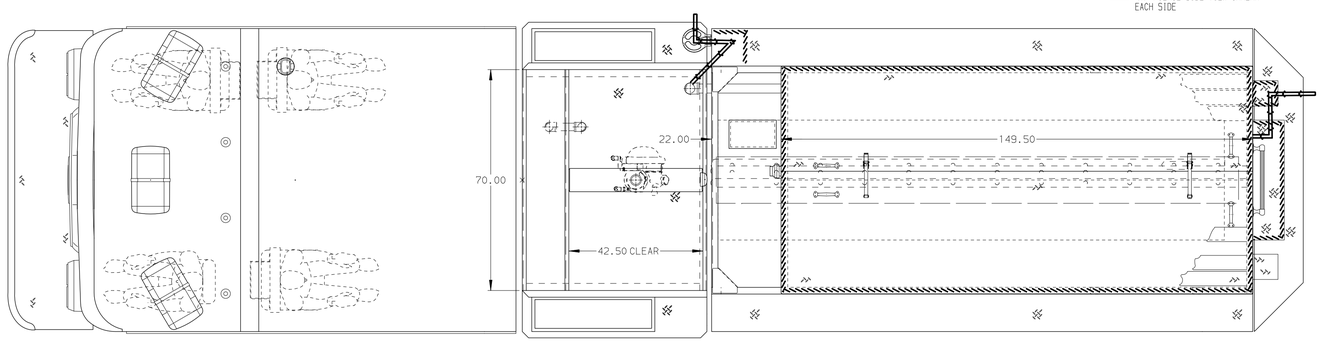

HOSEBED CAPACITY

BED 1
1200' OF 5.00" D.J. POLY HOSE

BED 2
200' OF 3.00" MERCEDES HOSE

BED 3
400' OF 3.00" MERCEDES HOSE

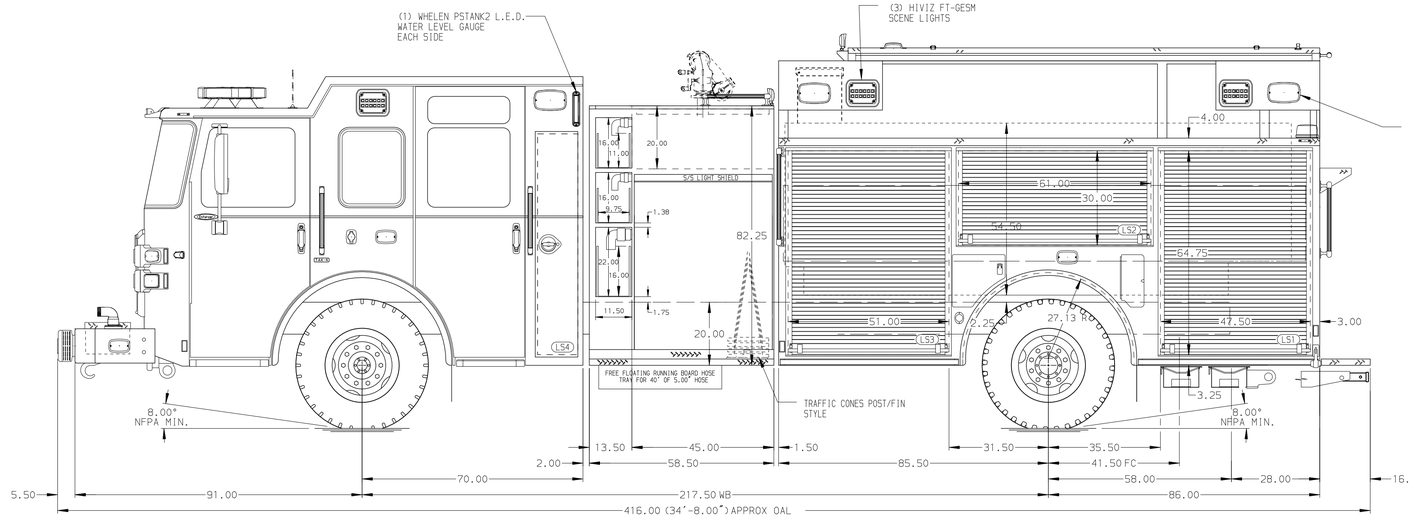

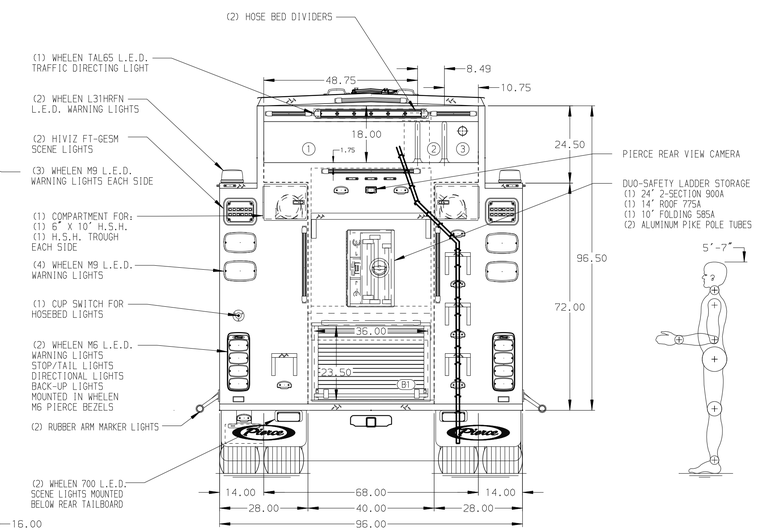

NOTE
DIMENSIONS SHOWN ARE APPROXIMATE AND ARE SUBJECT TO MINOR DEVIATIONS AS MAY OCCUR OR BE NECESSARY IN CONSTRUCTION.
MINOR DETAILS NOT SHOWN.

1. ONE 2.50 OUTLET WITH 2.50 PIPING AND SWIVEL LOCATED ON TOP BUMPER LEFT SIDE
2. SHORELINE RECEPTACLE WITH KUSSMAUL SUPER AUTO-EJECT LOCATED ON DRIVER SIDE OF THE CAB
3. AIR INLET WITH DISCONNECT COUPLING IN THE DRIVER SIDE STEPWELL
4. BATTERY CHARGER LOCATED PER ORDER
5. BATTERY CHARGE INDICATOR LOCATED ON THE DRIVER SIDE SEAT RISER
6. FIVE ADJUSTABLE SHELVES LOCATED PER ORDER
7. ONE FLOOR MOUNTED SLIDE-OUT TRAY LOCATED PER ORDER
8. ONE TILT/SLIDE-OUT TRAY LOCATED PER SHOP ORDER
9. ONE CTECH THREE DRAWER ASSEMBLY LOCATED PER SHOP ORDER
10. ONE SLIDE-OUT TOOLBOARD MOUNTED TO S1 WALL LOCATED PER SHOP ORDER
11. TWO SWING-OUT TOOLBOARD LOCATED PER SHOP ORDER
12. TWO SLIDE-OUT TOOLBOARDS LOCATED PER SHOP ORDER

CUSTOMER APPROVAL
APPROVED BY: _____
DATE: _____

REV	DATE	BY	CH
▽	-	-	-

CHASSIS DATA
MAKE: PIERCE
MODEL: ENFORCER

Pierce MANUFACTURING INC.

TITLE: Pierce Pumper Approval Drawing
FOR: Beavercreek Township Fire Departmen
DWG NO.: 39474AD

JOB NO.	39474 01-04
SCALE	1:24
DATE	
DRAWN BY	MMF 30JAN23
CHECKED BY	COL 01FEB23
SHEET SIZE	D
SHEET NO.	1 OF 1

View File Created 01-FEB-2023 14:04:40