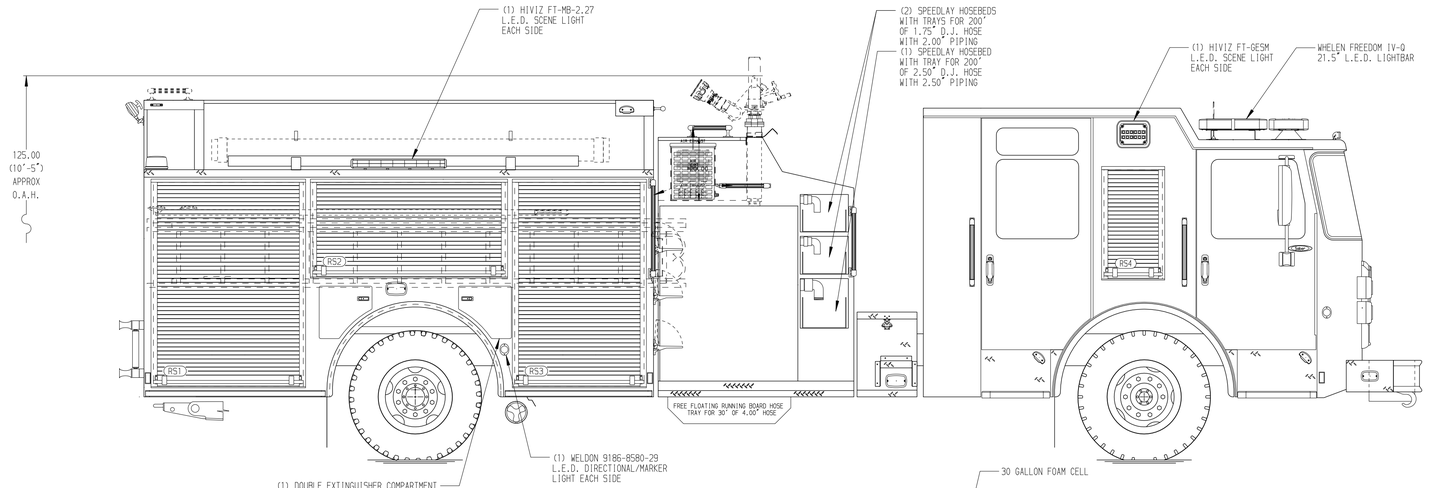

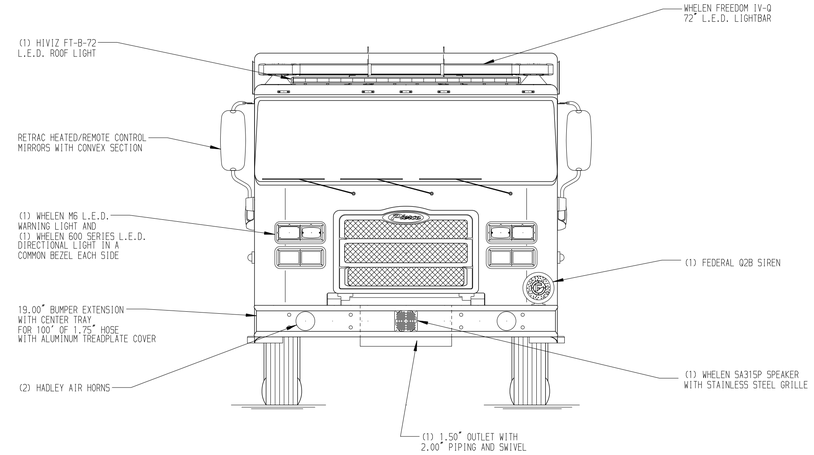

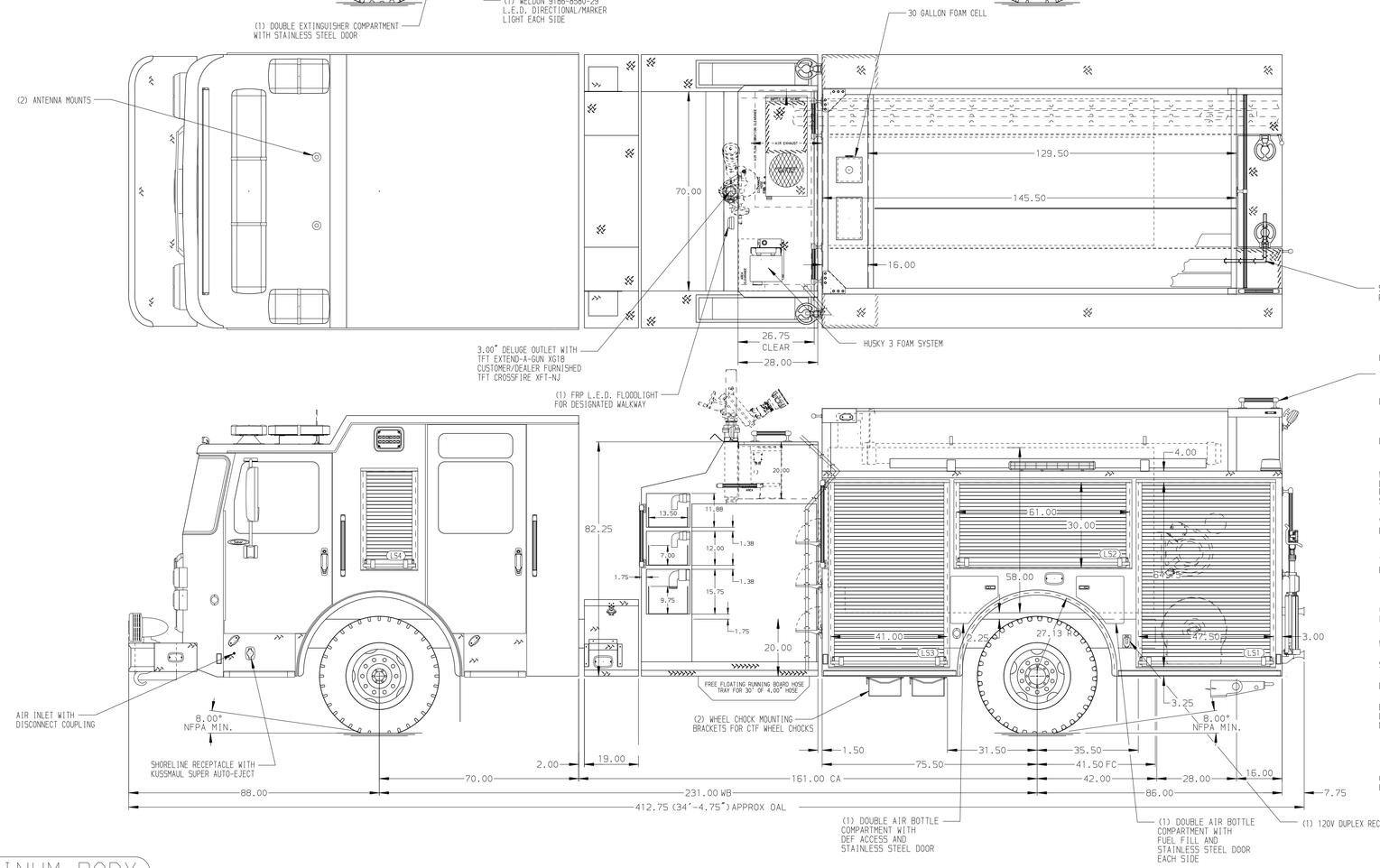

HOSEBED CAPACITIES

1. 900' OF 2.50" D.J. POLY HOSE
2. 900' OF 4.00" LDH HOSE

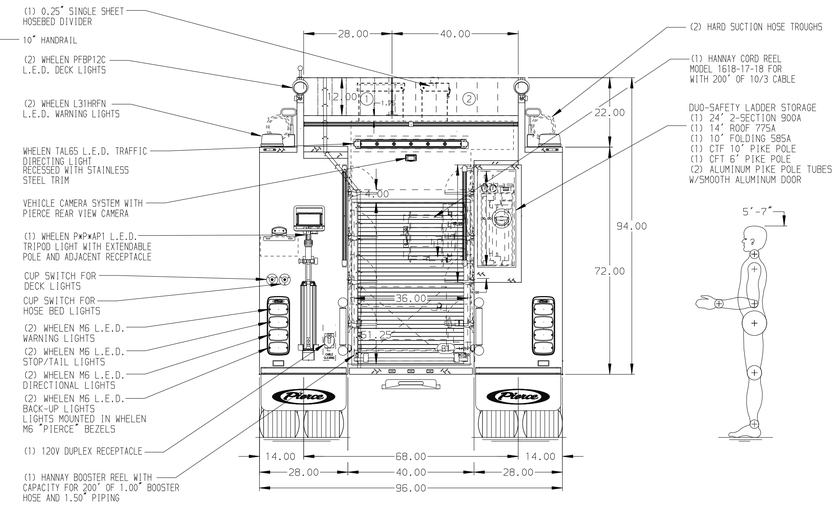

ALUMINUM BODY

NOTE

DIMENSIONS SHOWN ARE APPROXIMATE AND ARE SUBJECT TO MINOR DEVIATIONS AS MAY OCCUR OR BE NECESSARY IN CONSTRUCTION.
MINOR DETAILS NOT SHOWN.

REV	DATE	BY	CH
3	09OCT23	RWR	CCS
2	04AUG23	RHU	CCS
1	19MAY23	JWO	EGO

CHASSIS DATA
MAKE: PIERCE
MODEL: SABER FR

Pierce MANUFACTURING INC.

TITLE: 1500-5-1000P, 970G WATER-30G FOAM, 161" FH&D LS, FH FDLER RS, (3) SPDLYS, BOOSTER REEL, CORD REEL

FOR: CLINTON, MS
CLINTON, MISSISSIPPI

DWG NO. 39571AD

JOB NO.	39571
SCALE 1:24	DATE
DRAWN BY JWO	27APR22
CHECKED BY EGO	28ARP23
SHEET SIZE D	SHEET NO. 1 OF 1

View File Created 10-OCT-2023 08:37:38