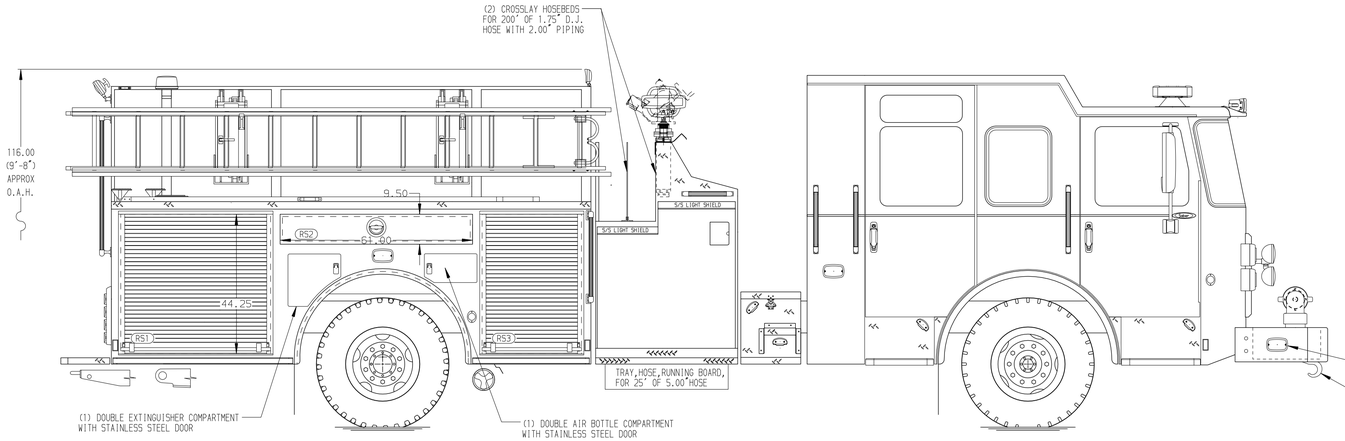

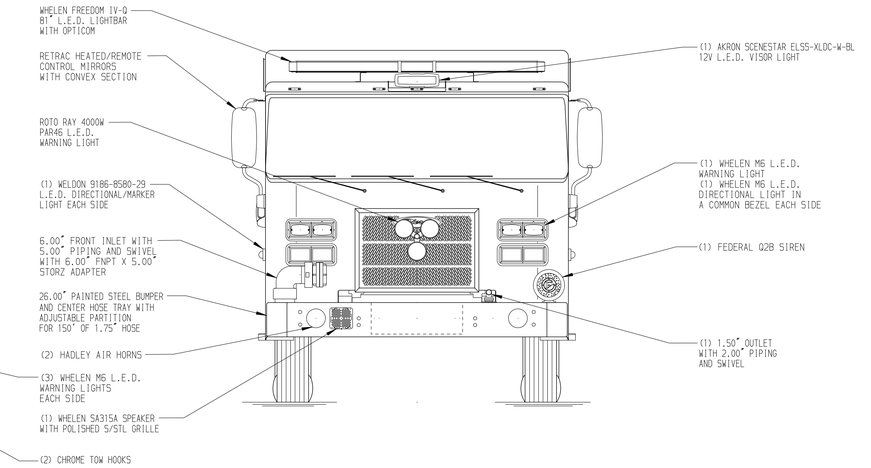

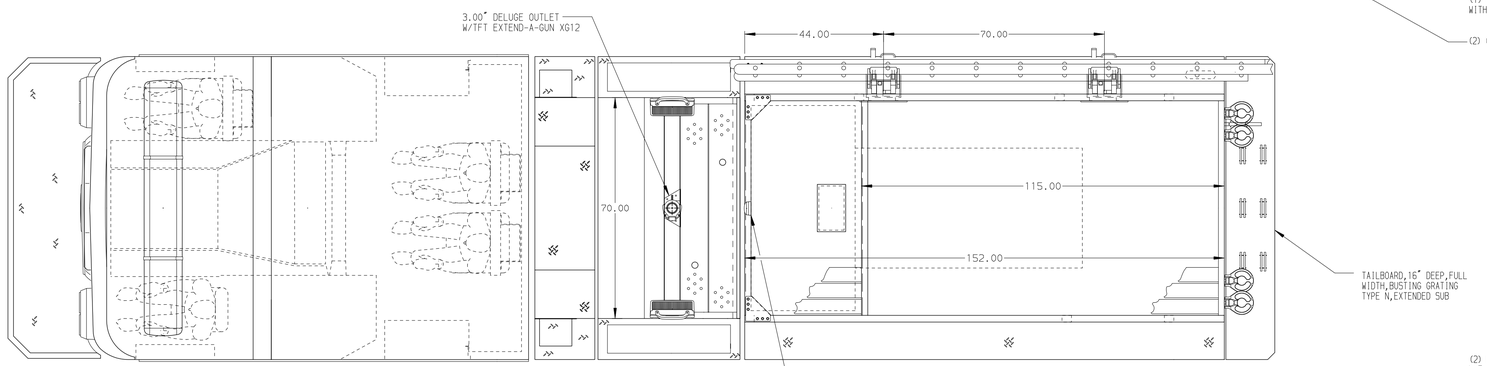

HOSEBED CAPACITIES

1. 500' OF 2.50" D.J. POLY HOSE
2. 500' OF 3.00" D.J. POLY HOSE
3. 200' OF 1.75" D.J. POLY HOSE
4. 500' OF 5.00" D.J. POLY HOSE
5. 500' OF 5.00" D.J. POLY HOSE

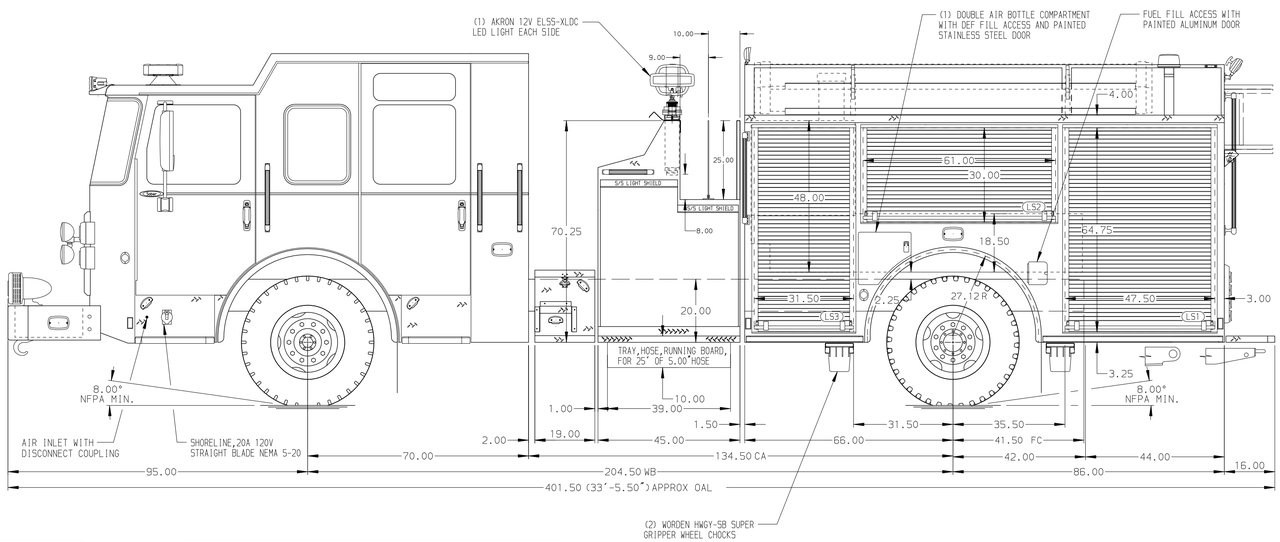

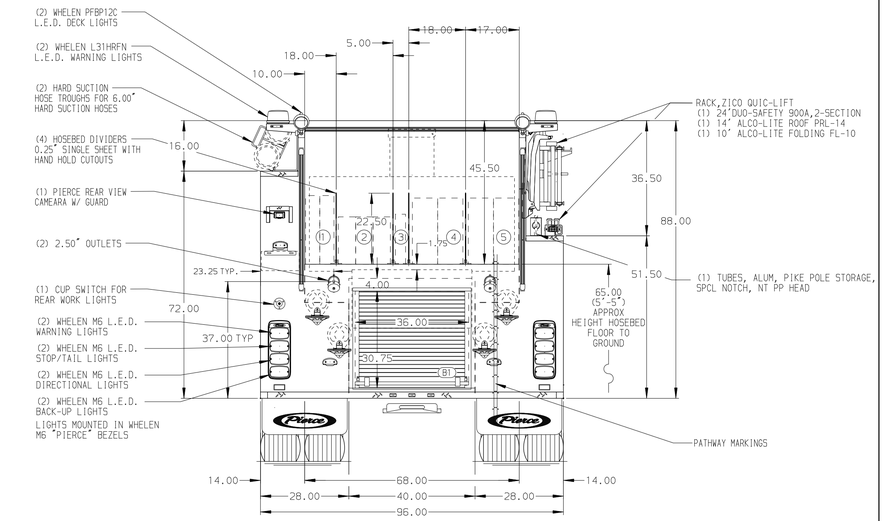

ALUMINUM BODY

MAXIMUM O.A.H. 116.00"

NOTE

DIMENSIONS SHOWN ARE APPROXIMATE AND ARE SUBJECT TO MINOR DEVIATIONS AS MAY OCCUR OR BE NECESSARY IN CONSTRUCTION.
MINOR DETAILS NOT SHOWN.

REV	DATE	BY	CH
B	04NOV23	RWR	NAS
A	23AUG23	VHO	NAS

Pierce MANUFACTURING INC.

CHASSIS DATA	TITLE	1500-D-500P, 500G WATER, 152" FDLER PUMPER BODY (2) CROSSLAYS, DELUGE, RS LADDER RACK	JOB NO. 39576
MAKE PIERCE	FOR	FISHERS FIRE DEPARTMENT FISHERS, INDIANA	SCALE 1:24 / DATE
MODEL SABER FR	DWG NO.	39576AD	DRAWN BY ARI 05MAY23
			CHECKED BY EGO 08MAY23
			SHEET SIZE D / SHEET NO. 1 OF 1

View File Created 06-NOV-2023 14:31:23