PUMPER

BODY
Medium Aluminum 2nd Gen Pumper

CHASSIS
Enforcer Chassis

CHASSIS

AXLE,FRONT,CUSTOM
19,500 Lb TAK-4 Axle

AXLE,REAR
24,000 Lb Dana Axle

ENGINE
450 HP Cummins L9 Engine

TRANSMISSION
Allison 6th Gen, 3000 EVS P

BUMPER
22" Extended Stainless Steel

CAB
7000 Enforcer Cab

BODY

TOTAL TANK CAPACITY
750 Gallon New York Style Poly Tank

WATER CAPACITY
750 Gallons of Water

FOAM CELL
Foam Cell Not Required

COMPT,PUMPER,REAR
30.75" FF RollUp Rear Compt

COMPT,PUMPER,LEFT SIDE
152" RollUp Full Height Front & Rear FDLER

COMPT,PUMPER,RIGHT SIDE
152" RollUp Low FDLER

FIRE SUPPRESSION

PUMPHOUSE
45" Control Zone Side Mount

PUMP
2000 GPM Hale QMAX-200

CROSSLAYS,1.50"
(2) 1.50" Standard Capacity

CROSSLAYS,2.50"
2.50" Crosslay Not Required

SPEEDLAYS
Speedlays Not Required

GENERATOR
Generator Not Required

FOAM SYSTEM
Foam System Not Required

SAFETY

Side Roll and Frontal Impact Protection

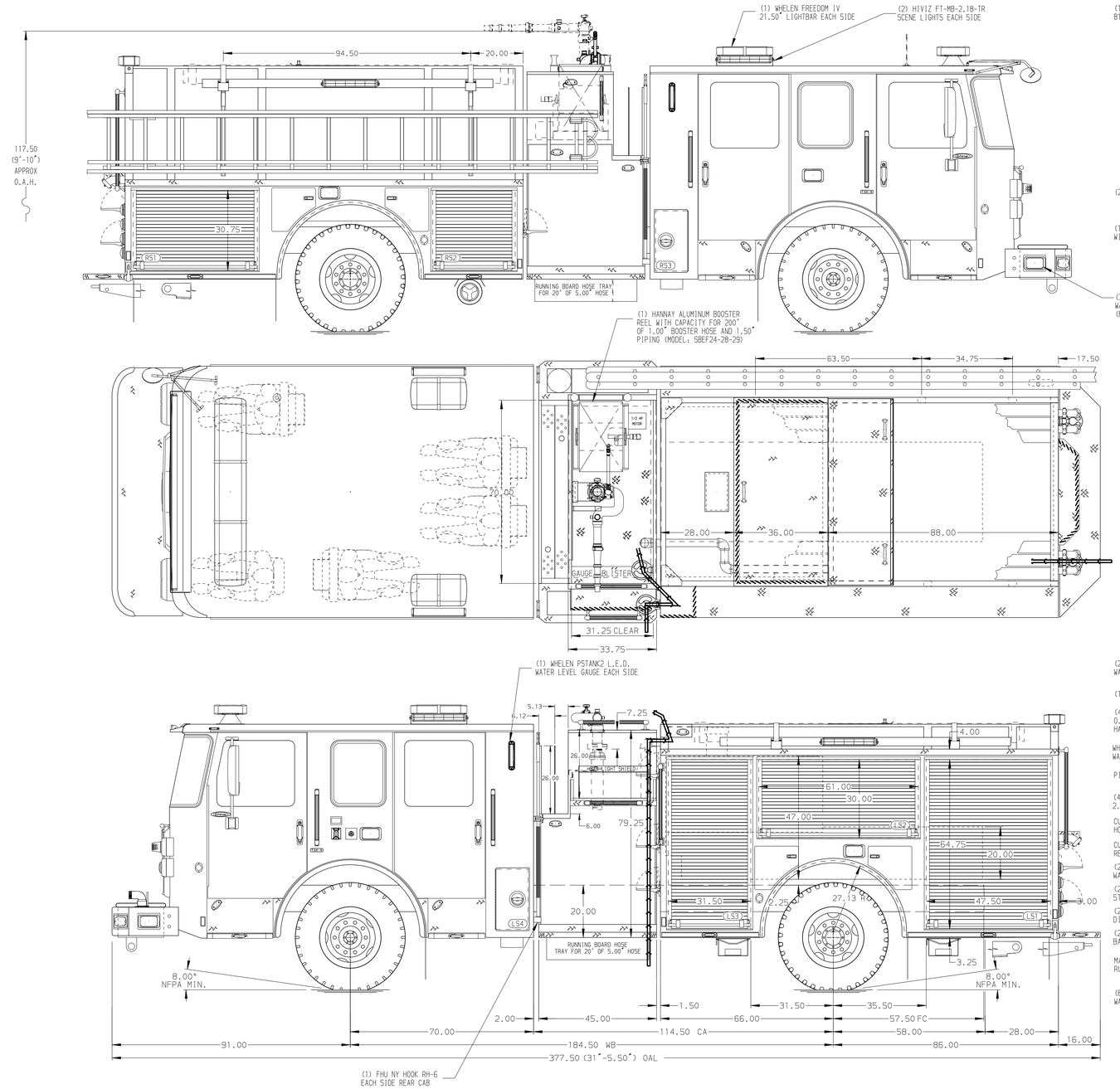

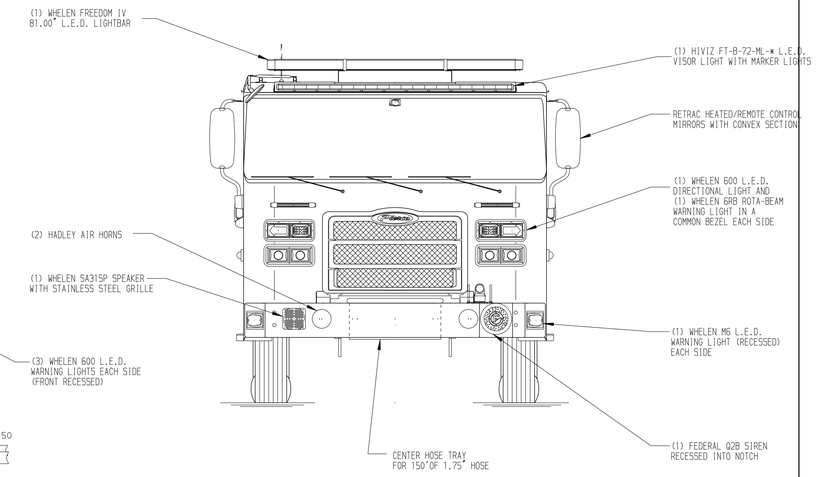

HOSEBED CAPACITY

BED 1
200' OF 2.50" D.J. POLY HOSE (ABOVE)
200' OF 2.50" D.J. POLY HOSE (BELOW)

BED 2
150' OF 1.75" D.J. POLY HOSE (ABOVE)
300' OF 1.75" D.J. POLY HOSE (BELOW)

BED 3
1000' OF 5.00" D.J. POLY HOSE

BED 4
150' OF 1.75" D.J. POLY HOSE (ABOVE)
300' OF 1.75" D.J. POLY HOSE (BELOW)

BED 5
150' OF 1.75" D.J. POLY HOSE (ABOVE)
300' OF 2.50" D.J. POLY HOSE (BELOW)

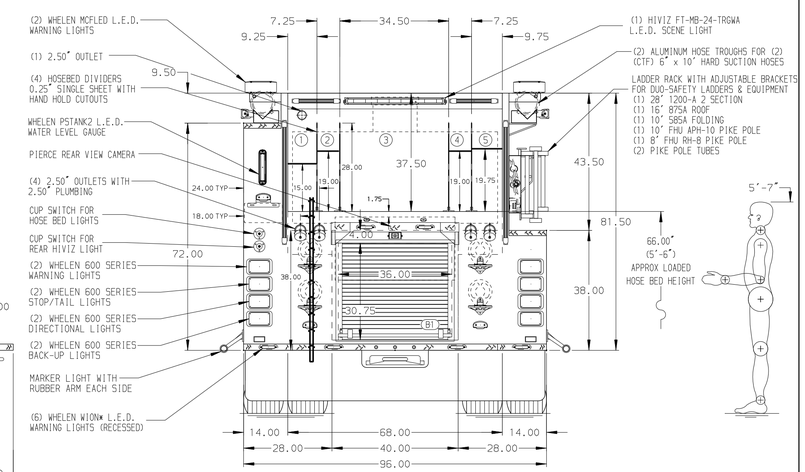

NOTE

DIMENSIONS SHOWN ARE APPROXIMATE AND ARE SUBJECT TO MINOR DEVIATIONS AS MAY OCCUR OR BE NECESSARY IN CONSTRUCTION.
MINOR DETAILS NOT SHOWN.

1. ONSPOT AUTOMATIC TIRE CHAINS TO BE PROVIDED AT REAR
2. ROSCO DV660V-2 LDV DUAL FORWARD AND INTERIOR CAMERA MOUNTED INSIDE OF FRONT WINDSHIELD
3. BATTERY CHARGER LOCATED BEHIND THE DRIVER'S SEAT
4. DUAL L.E.D. LIGHT STRIPS LOCATED IN HOSE BED
5. DRIP PAN GUARD FOR ROLL-UP DOOR LOCATED PER SHOP ORDER
6. FOUR FULL WIDTH/DEPTH ADJUSTABLE SHELVES LOCATED PER SHOP ORDER
7. ONE FIXED FULL WIDTH/DEPTH SHELF LOCATED PER SHOP ORDER
8. ONE SWING-OUT ALUMINUM TOOL BOARD LOCATED PER SHOP ORDER
9. PARTITION BETWEEN COMPARTMENTS RS1/B1
10. TWO VERTICAL PARTITIONS (SPECIAL HEIGHT) LOCATED PER SHOP ORDER
11. RETENTION NETTING LOCATED PER SHOP ORDER
12. ONE TOOL BOARD MOUNTED ON THE BACK WALL LOCATED PER SHOP ORDER
13. TWO 6-PLACE 120V DUPLEX RECEPTACLES LOCATED PER SHOP ORDER
14. ONE 120V RECEPTACLE LOCATED PER SHOP ORDER

REV	DATE	BY	CH
1	11MAR24	MMF	JGO
0	10JAN24	MMF	JGO

CHASSIS DATA
MAKE: PIERCE
MODEL: ENFORCER

Pierce MANUFACTURING INC.

TITLE	Pierce Pumper Approval Drawing -	JOB NO.	39583 01-02
		SCALE	1:24
		DRAWN BY	MMF
FOR	Wesley Chapel -	CHECKED BY	AMI
DWG NO.	39583AD	SHEET SIZE	D
		SHEET NO.	1 OF 1
		DATE	15NOV23
			16NOV23

View File Created 11-MAR-2024 09:31:44