PUMPER

BODY
Long Aluminum 2nd Gen Pumper

CHASSIS
Enforcer Chassis

CHASSIS

AXLE, FRONT, CUSTOM
20,000 lb Dana Axle

AXLE, REAR
27,000 lb Dana Axle

ENGINE
400 HP Cummins L9 Engine

TRANSMISSION
Allison 6th Gen, 3000 EVS P

BUMPER
22" Extended Painted Steel

CAB
7010 Enforcer Cab

BODY

WATER TANK
1000 Gallon Poly Water Tank

COMPT, PUMPER, REAR
44.50" FF Rollup Rear Compt

COMPT, PUMPER, LEFT SIDE
161" Rollup Full Height Front & Rear FDLER

COMPT, PUMPER, RIGHT SIDE
161" Rollup Full Height Front & Rear FDLER

FIRE SUPPRESSION

PUMPHOUSE
45" Control Zone Side Mount

PUMP
1500 GPM Darley PSM

CROSSLAYS, 1.50"
(2) 1.50" Standard Capacity

CROSSLAYS, 2.50"
(1) 2.50" Standard Capacity

SPEEDLAYS
Speedlays Not Required

GENERATOR
Generator Not Required

Foam System
Foam System Not Required

Foam Cell
Foam Cell Not Required

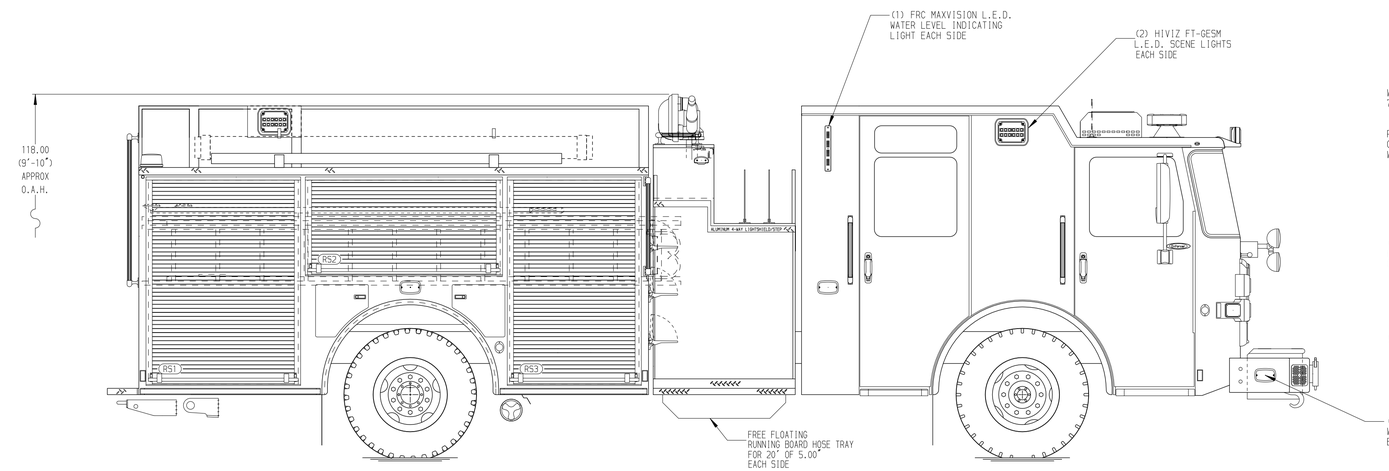

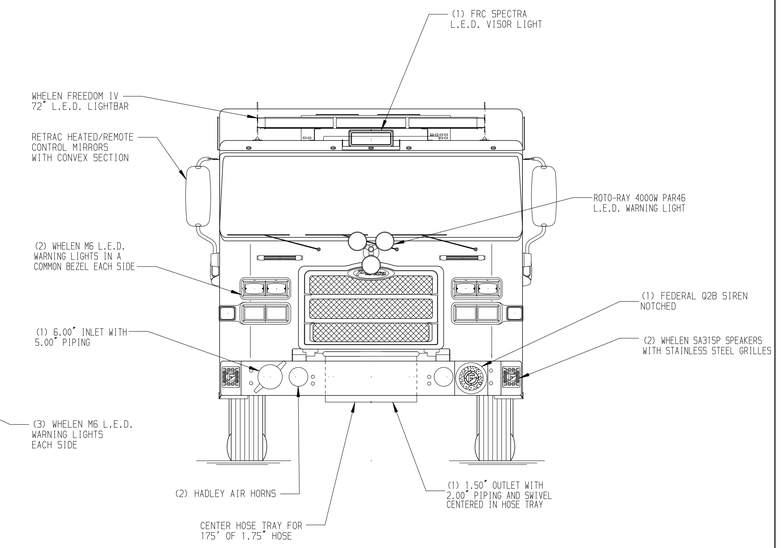

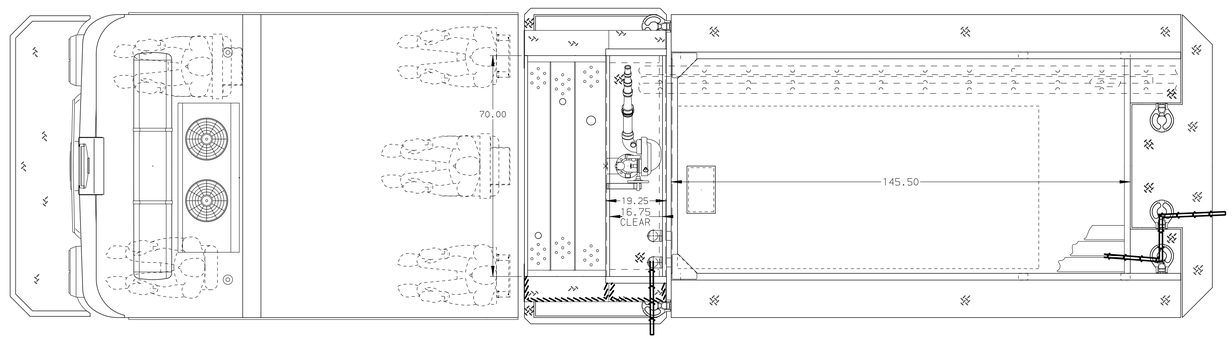

HOSEBED CAPACITY

BED 1
150' OF 3.00" D.J. POLY HOSE

BED 2
150' OF 3.00" D.J. POLY HOSE

BED 3
1000' OF 5.00" D.J. POLY HOSE

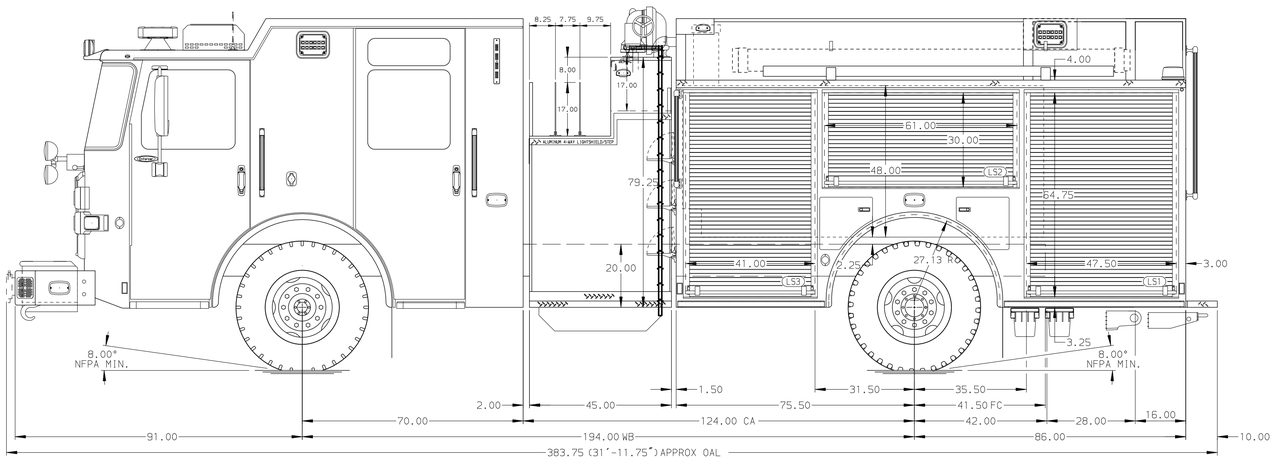

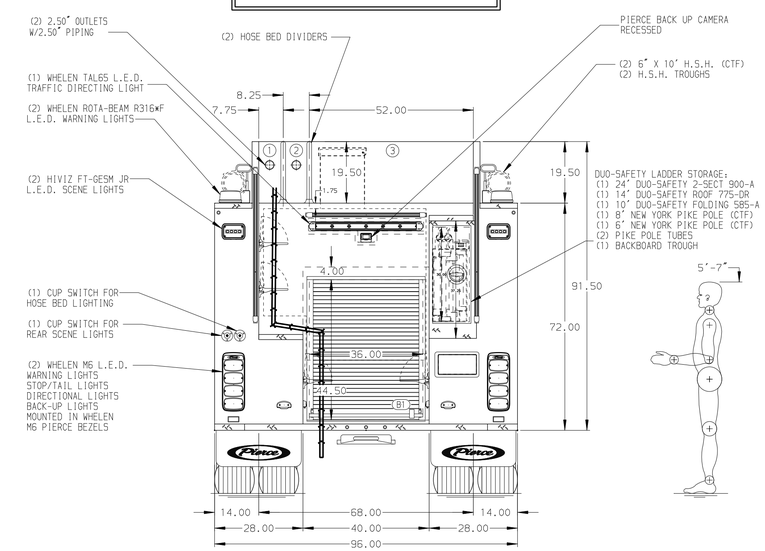

NOTE

DIMENSIONS SHOWN ARE APPROXIMATE AND ARE SUBJECT TO MINOR DEVIATIONS AS MAY OCCUR OR BE NECESSARY IN CONSTRUCTION.
MINOR DETAILS NOT SHOWN.

1. SHORELINE RECEPTACLE WITH KUSSMAUL SUPER AUTO-EJECT LOCATED ON DRIVER SIDE OF THE CAB
2. AIR INLET/OUTLET WITH DISCONNECT COUPLING ON DRIVER SIDE PUMP PANEL
3. BATTERY CHARGER LOCATED PER ORDER
4. BATTERY CHARGE INDICATOR LOCATED ON THE DRIVER SIDE SEAT RISER
5. FIVE ADJUSTABLE SHELVES LOCATED PER ORDER
6. ONE FLOOR MOUNTED SLIDE-OUT TRAYS LOCATED PER ORDER
7. TWO SWING-OUT TOOLBOARDS LOCATED PER ORDER

REV	DATE	BY	CH
1	18MAR24	JAM	CHR
0	04JAN24	JAM	CHR

CHASSIS DATA	
MAKE	PIERCE
MODEL	ENFORCER
TITLE	Pierce Pumper Approval Drawing -
FOR	St Tammany Fire District 2 -
DWG NO.	39751AD

Pierce MANUFACTURING INC.

JOB NO.	39751
SCALE	1:24
DATE	
DRAWN BY	JAM 30OCT23
CHECKED BY	MMF 31OCT23
SHEET SIZE	D
SHEET NO.	1 OF 1

View File Created 21-MAR-2024 09:07:00