PUMPER

BODY
Medium Aluminum 2nd Gen Pumper

CHASSIS
Enforcer Chassis

CHASSIS

AXLE, FRONT, CUSTOM
18,000 Lb Meritor Axle

AXLE, REAR
27,000 Lb Meritor Axle

ENGINE
450 HP Cummins L9 Engine

TRANSMISSION
Allison 6th Gen, 3000 EVS P

BUMPER
19" Extended Painted Steel

CAB
7000 Enforcer Cab

BODY

TOTAL TANK CAPACITY
840 Gallon Poly Tank

WATER CAPACITY
750 Gallons of Water

FOAM CELL
40 Gallon Foam Cell #1
50 Gallon Foam Cell #2

COMPT, PUMPER, REAR
44.50" FF Rollup Rear Compt

COMPT, PUMPER, LEFT SIDE
152" Rollup Full Height Front & Rear FDLER

COMPT, PUMPER, RIGHT SIDE
152" Lap Full Height Front & Rear FDLER

FIRE SUPPRESSION

PUMPHOUSE
48" Control Zone Top Mount

PUMP
1500 GPM Hale QMAX-150

CROSSLAYS, 1.50"
1.50" Crosslays Not Required

CROSSLAYS, 2.50"
2.50" Crosslay Not Required

SPEEDLAYS
(4) 1.50" W/Tray Std. Capacity

GENERATOR
Generator Not Required

FOAM SYSTEM
Husky 3 Single Agent Foam System

SAFETY
Side Roll and Frontal Impact Protection

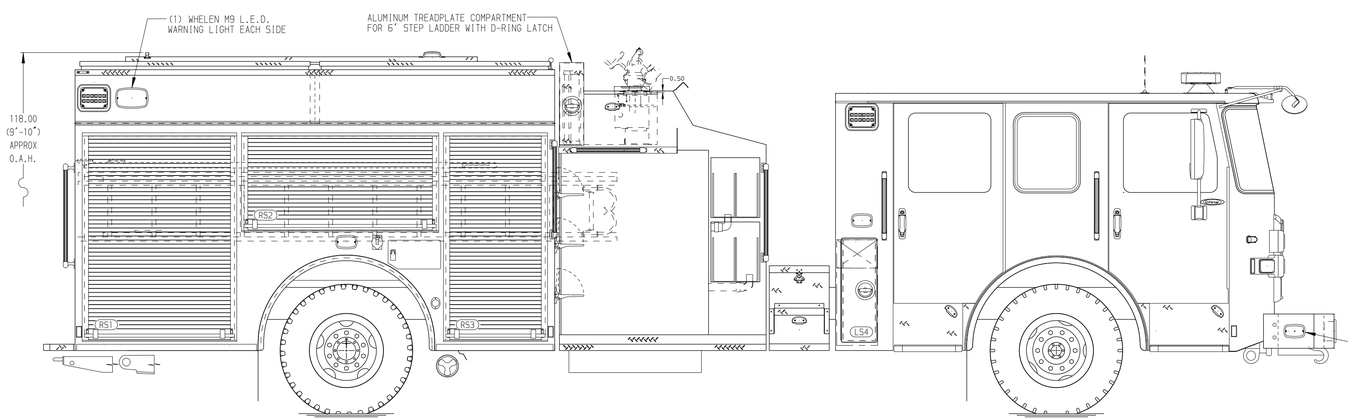

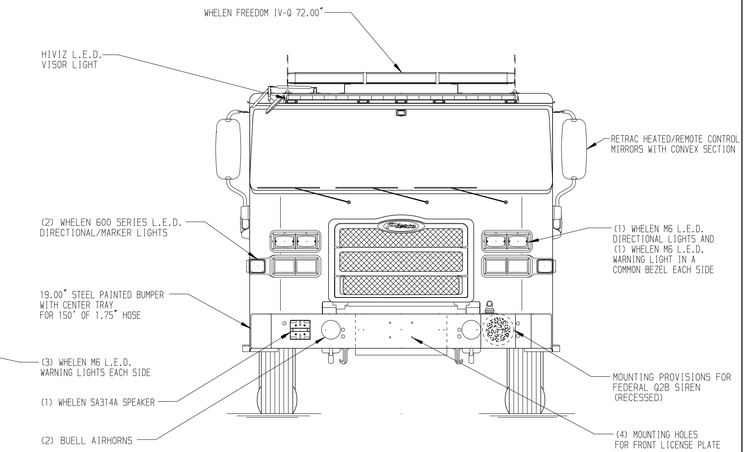

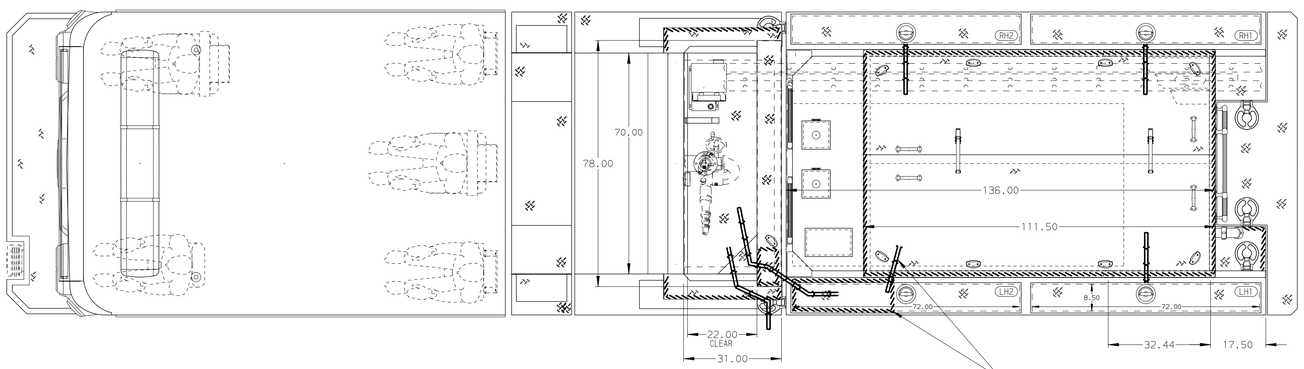

HOSEBED CAPACITY

BED 1
200' OF 2.5" D.J. POLY HOSE

BED 2
500' OF 2.50" D.J. POLY HOSE

BED 2
1000' OF 5.00" D.J. POLY HOSE

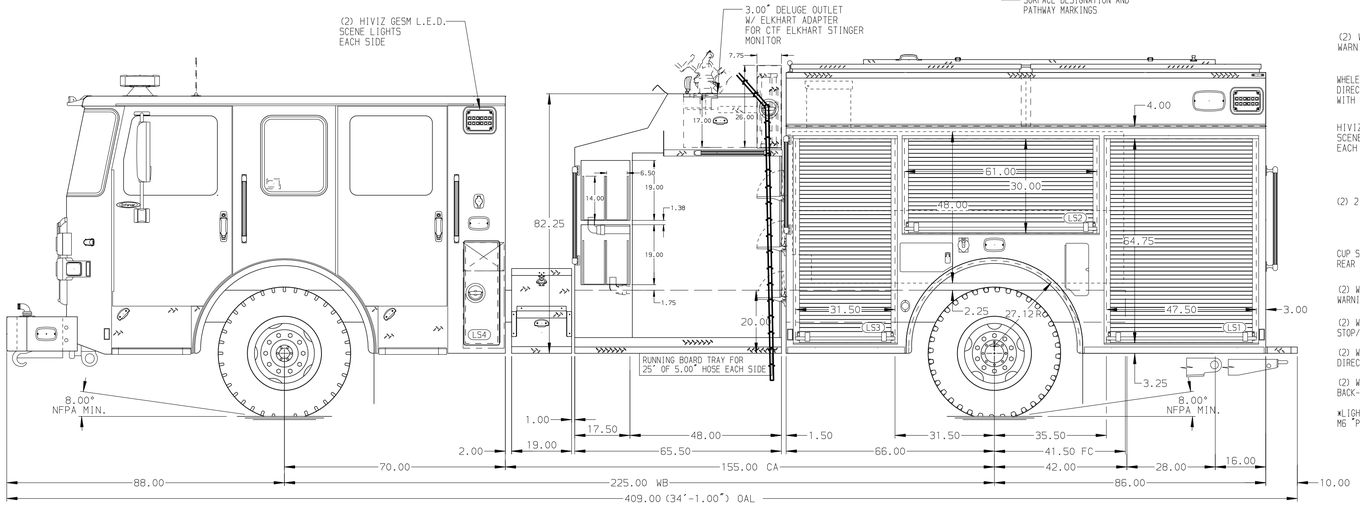

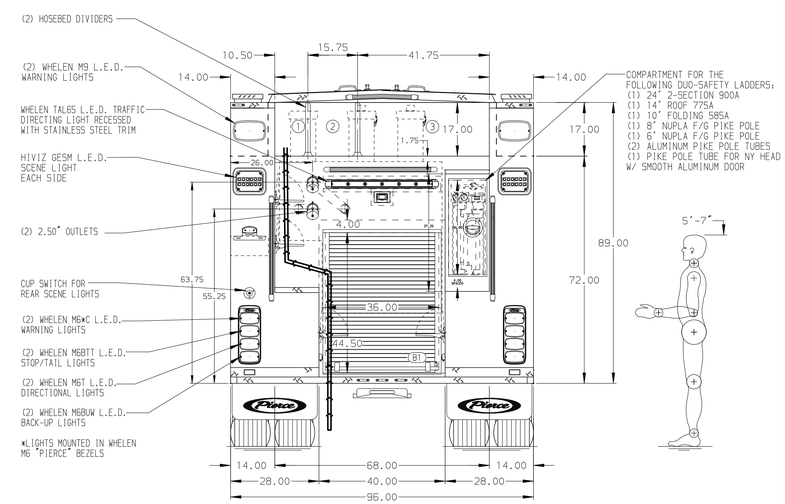

ALUMINUM BODY

NOTE

DIMENSIONS SHOWN ARE APPROXIMATE AND ARE SUBJECT TO MINOR DEVIATIONS AS MAY OCCUR OR BE NECESSARY IN CONSTRUCTION.
MINOR DETAILS NOT SHOWN.

1. INVERTER/BATTERY CHARGER LOCATED PER SHOP ORDER
2. BATTERY CHARGER INDICATOR LOCATED PER SHOP ORDER
3. DUAL L.E.D. LIGHT STRIPS LOCATED ON THE FRONT OF THE HOSEBED
4. L.E.D. LIGHT STRIP LOCATED IN HOSE BEDS PER SHOP ORDER
5. DRIP PAN GUARD FOR ROLL-UP DOOR PER SHOP ORDER
6. SEVEN FULL WIDTH/DEPTH ADJUSTABLE SHELVES PER SHOP ORDER
7. ONE FLOOR MOUNTED SLIDE-OUT TRAY PER SHOP ORDER
8. SWING-OUT TOOL BOARD WITH PEGBOARD PATTERN PER SHOP ORDER
9. ALUMINUM PEGBOARD PER SHOP ORDER
10. AIR INLET/OUTLET LOCATED ON DRIVERS SIDE PUMP PANEL
11. ONE 120V RECEPTACLE LOCATED IN COMPARTMENT PER SHOP ORDER
12. NORCOLD REFRIGERATOR LOCATED PER SHOP ORDER
13. TURTLE TILE WITH RAMP ON COMPARTMENT FLOORS PER SHOP ORDER
14. TURTLE TILE WITH RAMP ON SHELVES PER SHOP ORDER
15. (1) 1.5" OUTLET WITH 2.00" PIPING AND SWIVEL LOCATED L.S. TOP OF BUMPER
16. (1) 120V RECEPTACLE L.S. & R.S. BODY FENDER PANELS
17. 120V 20A SHORELINE RECEPTACLE WITH KUSSMAUL SUPER AUTO-EJECT D.S. CREW CAB
18. MICROPHONE & SPEAKER COMPARTMENT WITH PLAIN DOOR - TOP MOUNT PANEL

REV	DATE	BY	CH
B	21MAR24	SDR	DTJ
A	24JAN24	MMF	DTJ

CHASSIS DATA
MAKE: PIERCE
MODEL: ENFORCER

Pierce MANUFACTURING INC.

TITLE: Pumper Approval Drawing
FOR: Beaumont Fire Rescue
DWG NO.: 39769AD

JOB NO. 39769
SCALE 1:24
DATE
DRAWN BY SDR 08DEC23
CHECKED BY AMI 08DEC23
SHEET SIZE D
SHEET NO. 1 OF 1

View File Created 28-MAR-2024 10:47:57