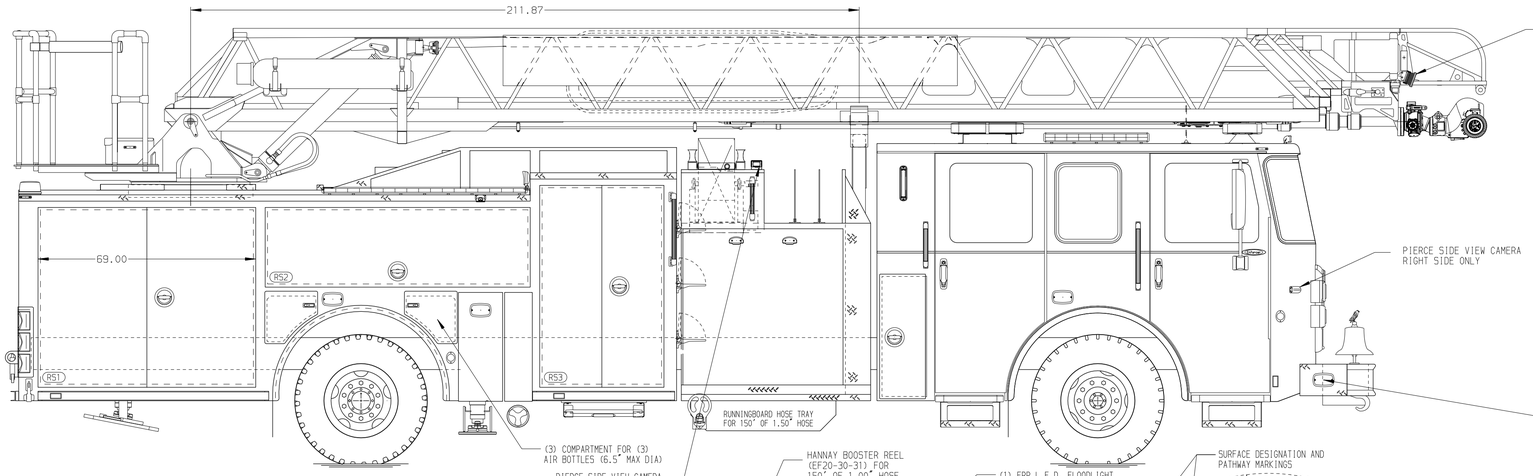

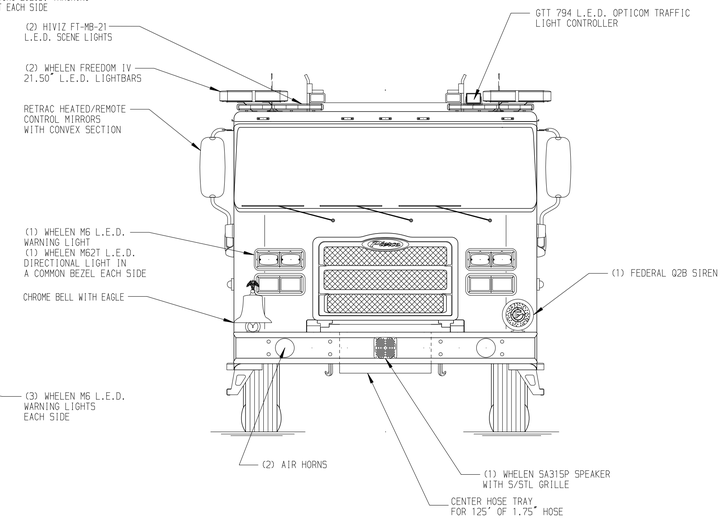

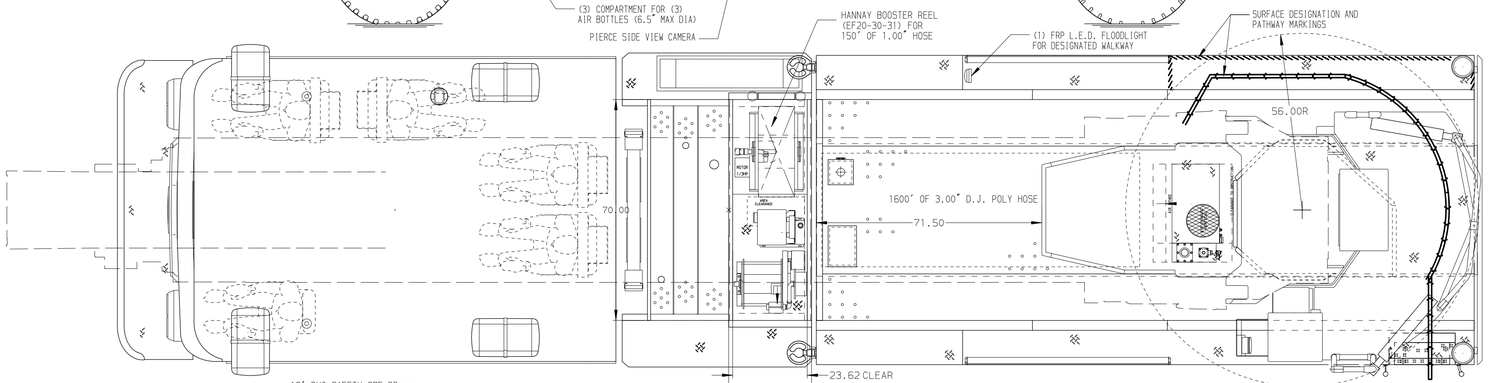

BODY	TOTAL TANK CAPACITY
107' ASL Aluminum Body	500 Gallon Poly Tank
COMPT,LEFT SIDE FRONT	WATER CAPACITY
Full Height Lap Forward	470 Gallons of Water
COMPT,LEFT SIDE REAR	FOAM CELL CAPACITY
Full Height Lap Rearward	30 Gallon Foam Cell
COMPT,RIGHT SIDE FRONT	FOAM SYSTEM
Full Height Lap Forward	Husky 3 Single Agent Foam System
COMPT,RIGHT SIDE REAR	
Full Height Lap Rearward	

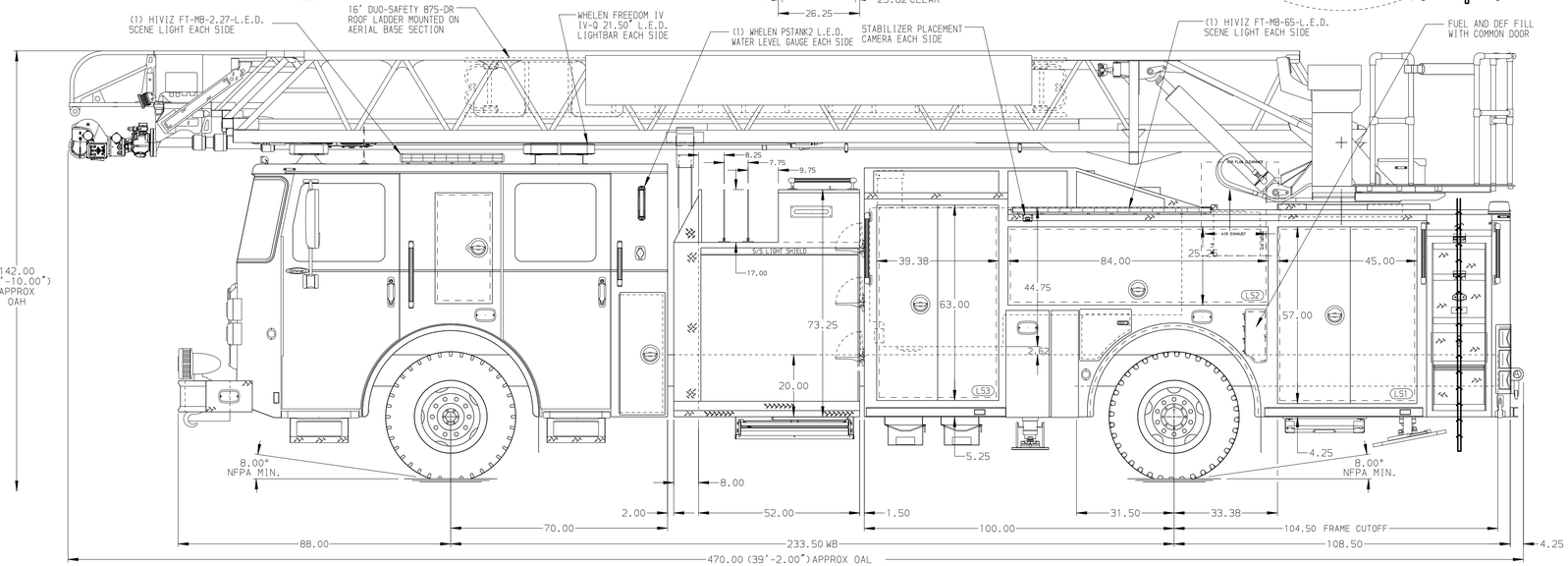

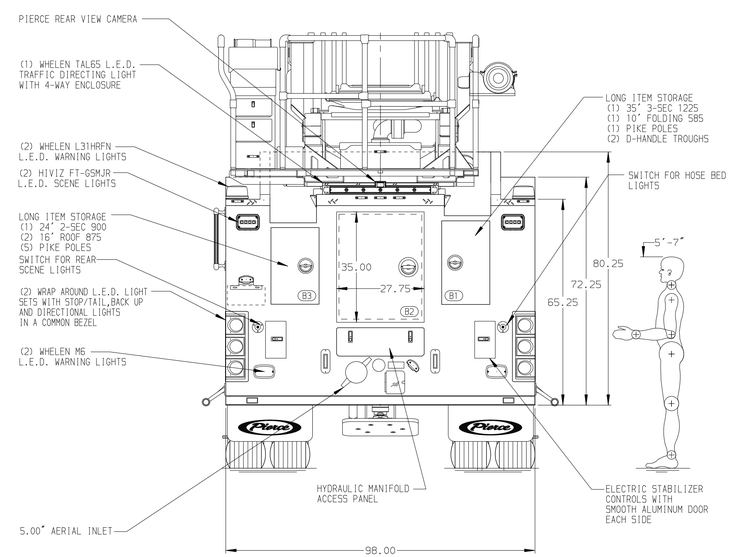

CHASSIS	CAB	AXLE,FRONT,CUSTOM	TRANSMISSION	PUMPHOUSE	CROSSLAYS,1.50"	SPEEDLAYS	SAFETY
Enforcer Chassis	7000 Enforcer Cab	23,000 lb Dana Axle	Allison 6th Gen, 4000 EVS P	52" Control Zone Side Mount	(2) 1.50" Standard Capacity	Speedlays Not Required	Side Roll and Frontal Impact Protection
ENGINE	BUMPER	AXLE,REAR		PUMP	CROSSLAYS,2.50"	GENERATOR	
525 HP Cummins X12 Engine	19" Extended Stainless Steel	33,500 lb Meritor Axle		2000 GPM Waterous CSU	(1) 2.50" Standard Capacity	Harrison 6Kw MSV Hydraulic	

NOTE

DIMENSIONS SHOWN ARE APPROXIMATE AND ARE SUBJECT TO MINOR DEVIATIONS AS MAY OCCUR OR BE NECESSARY IN CONSTRUCTION.
MINOR DETAILS NOT SHOWN.

1. NO LIMITED RETRACTION REQUIRED
2. ONE 1.50 OUTLET WITH 2.00 PIPING AND SWIVEL LOCATED IN CENTER BUMPER TRAY
3. SHORELINE RECEPTACLE WITH KUSSMAUL SUPER AUTO-EJECT LOCATED ON DRIVER SIDE OF THE CAB
4. AIR INLET/OUTLET WITH DISCONNECT COUPLING IN THE DRIVER SIDE STEPWELL
5. BATTERY CHARGER LOCATED PER ORDER
6. FIVE ADJUSTABLE SHELVES LOCATED PER ORDER
7. ONE SWING-OUT TOOLBOARD PER ORDER
8. NON-RAISED AERIAL PEDESTAL
9. LIFTING EYE ROPE RESCUE ATTACHMENT AT AERIAL TIP
10. 1500 GPM HIGH FLOW WATERWAY
11. ONSPOT AUTOMATIC TIRE CHAINS
12. ONE VERTICAL PARTITION PER ORDER
13. CIRCUIT BREAKER PANEL PER ORDER
14. RUNG LIGHTING ON AERIAL LADDER
15. AC POWER TO AERIAL LADDER TIP
16. WIRELESS CAMERA ON AERIAL EGRESS PER ORDER
17. PEG BOARD ON BACK WALL OF COMPARTMENTS PER ORDER

MIN A.O.A. 10°
MIN A.O.D. 10°

REV	DATE	BY	CH
7	22MAR24	LWE	AST
6	19JAN24	LWE	AST

CHASSIS DATA — MAKE: PIERCE — MODEL: ENFORCER

Pierce MANUFACTURING INC.

TITLE: 107' ASCENDANT AERIAL LADDER AND BODY ASSEMBLY
FOR: SPRINGFIELD FD CITY OF SPRINGFIELD, TN
DWG NO.: 39788AD

JOB NO.	39788
SCALE	1:24
DATE	
DRAWN BY	LWE 14NOV23
CHECKED BY	NAK 16NOV23
SHEET SIZE	D
SHEET NO.	1 OF 1

View File Created 25-MAR-2024 10:27:07