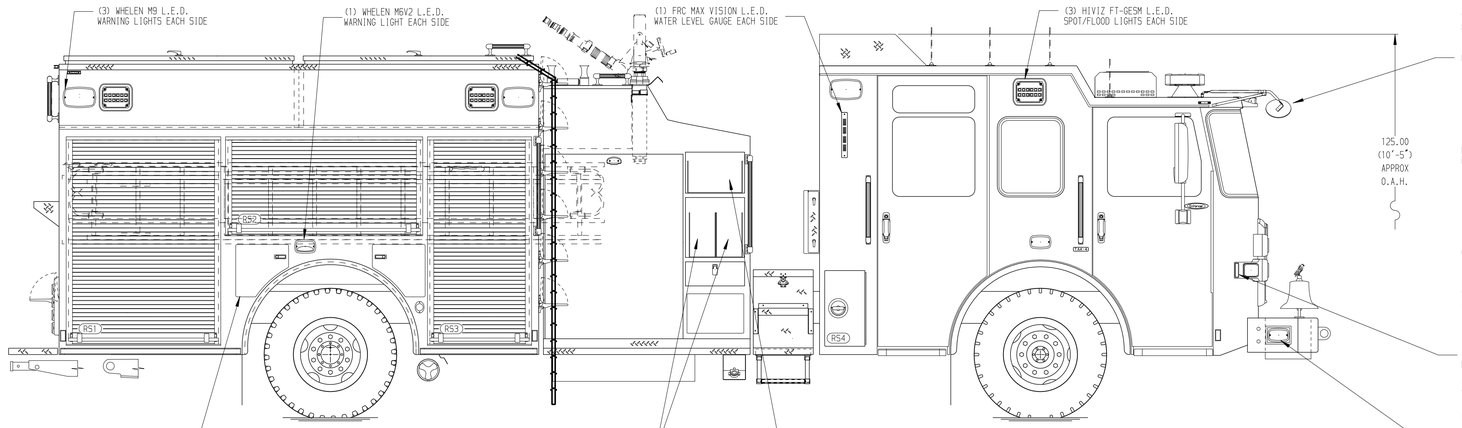

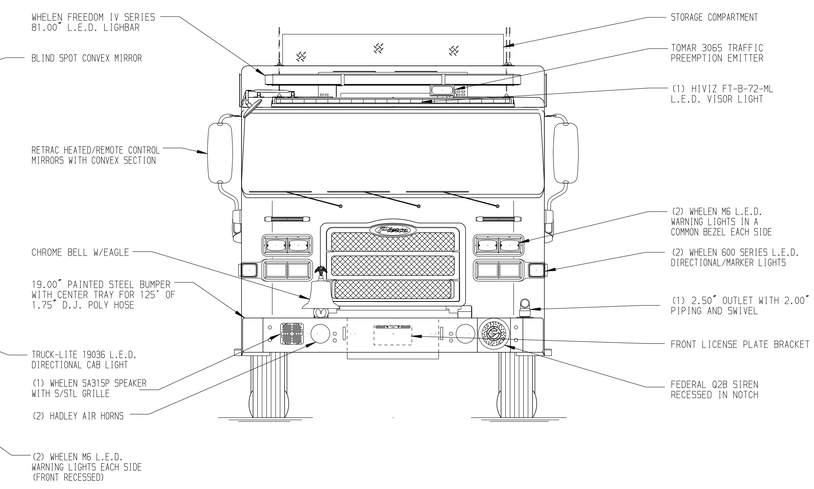

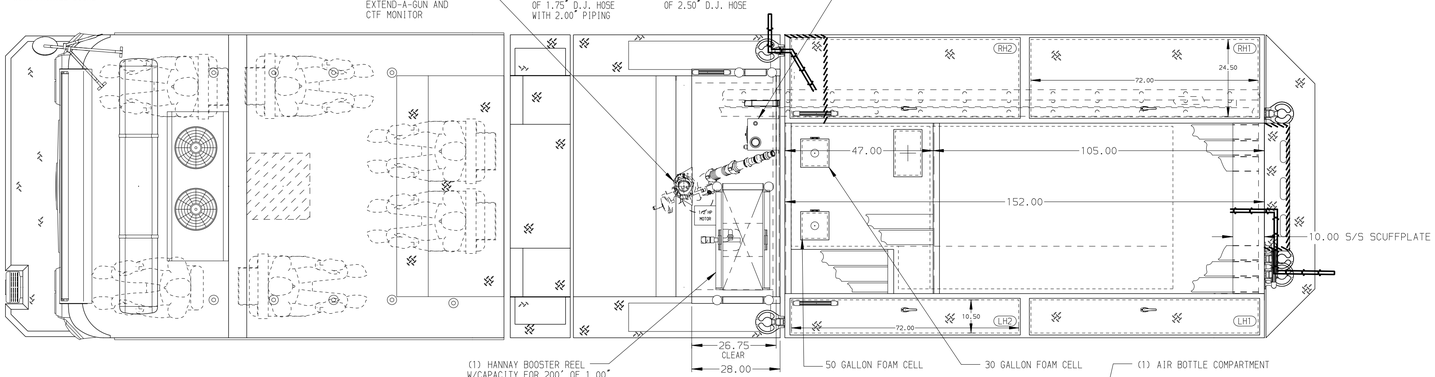

HOSEBED CAPACITIES

1 - 300' OF 3.00" D.J. POLY HOSE
2 - 300' OF 3.00" D.J. POLY HOSE
3 - 200' OF 3.00" D.J. POLY HOSE
4 - 200' OF 2.50" HOSE (IN 5.50"W X 28"H X 71"L TRAY)
5 - 200' OF 1.75" HOSE (IN 4.25"W X 25"H X 71"L TRAY)
6 - 1000' OF 5.00" D.J. POLY HOSE

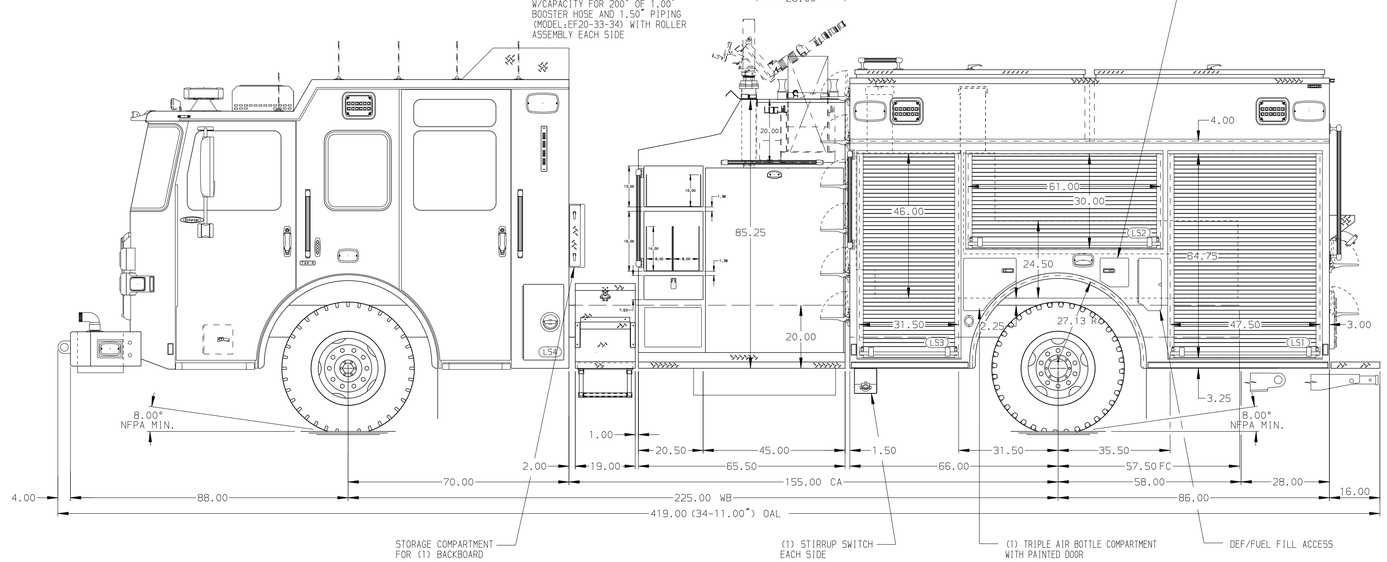

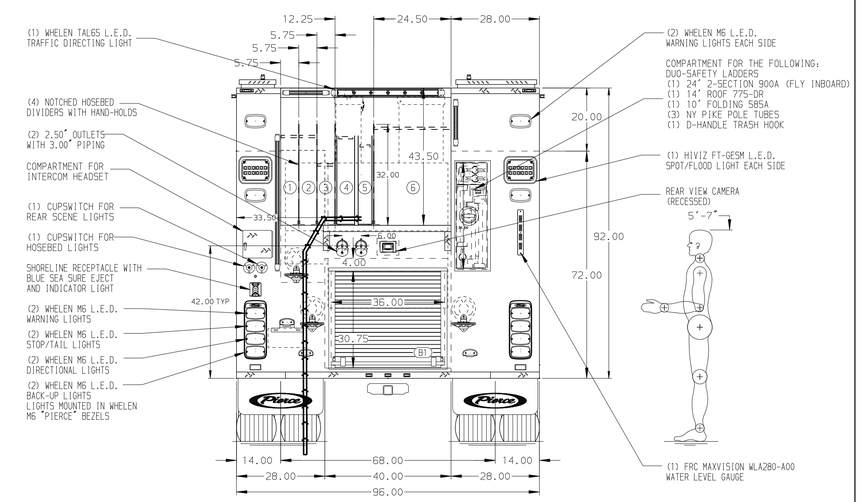

ALUMINUM BODY

SIDE ROLL AND FRONTAL IMPACT PROTECTION

NOTE

DIMENSIONS SHOWN ARE APPROXIMATE AND ARE SUBJECT TO MINOR DEVIATIONS AS MAY OCCUR OR BE NECESSARY IN CONSTRUCTION.
MINOR DETAILS NOT SHOWN.

1. WHEEL CHOCKS AND MOUNTING BRACKETS PROVIDED BY DEALER
2. AIR INLET/OUTLET WITH DISCONNECT FITTING LOCATED ON DRIVER'S SIDE PUMP PANEL
3. BATTERY CHARGER LOCATED BEHIND DRIVER SEAT
4. BATTERY CHARGE INDICATOR LOCATED ON DRIVER'S SEAT RISER
5. MIC & SPEAKER COMPARTMENT IN TOP MOUNT PANEL

REV	DATE	BY	CH
D	07MAR24	KBO	JBL
C	05DEC23	JJB	KBO
B	05OCT23	JJB	KBO
A	14JUL23	KLE	KBO

CHASSIS DATA
MAKE: PIERCE
MODEL: ENFORCER

Pierce MANUFACTURING INC.

TITLE: 1500-D-580P, 500G WATER, 30G & 50G FOAM, 152" BODY LADDERS BUILT IN RS BODY, (3) SPEEDLAYS, DELUGE
FOR: AUSTIN FIRE DEPARTMENT, AUSTIN, TEXAS
DWG NO. 39896AD-SH1

JOB NO.	39896
SCALE	1:24
DATE	
DRAWN BY	JJB 17MAY23
CHECKED BY	KBO 17MAY23
SHEET SIZE	D
SHEET NO.	1 OF 2

View File Created 08-APR-2024 12:16:29