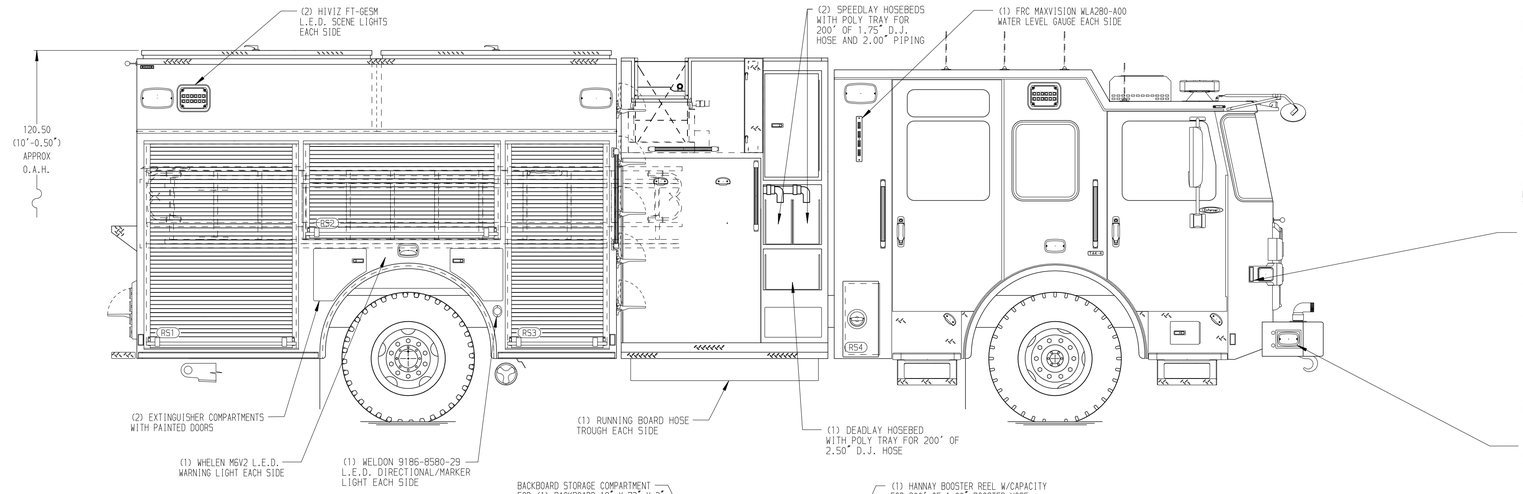


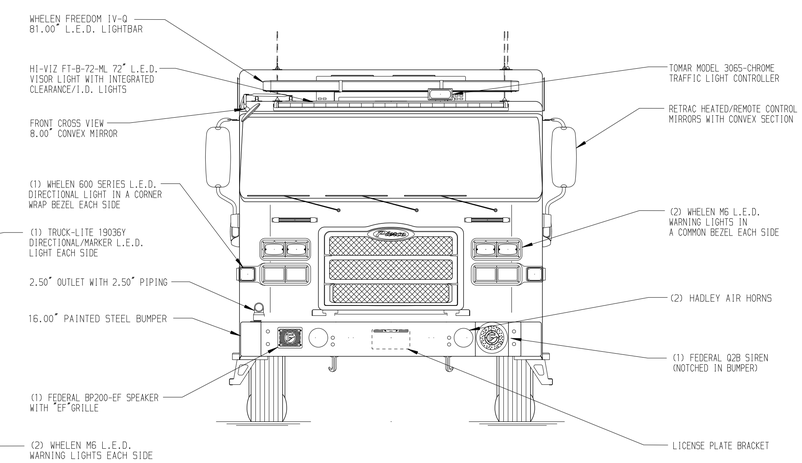


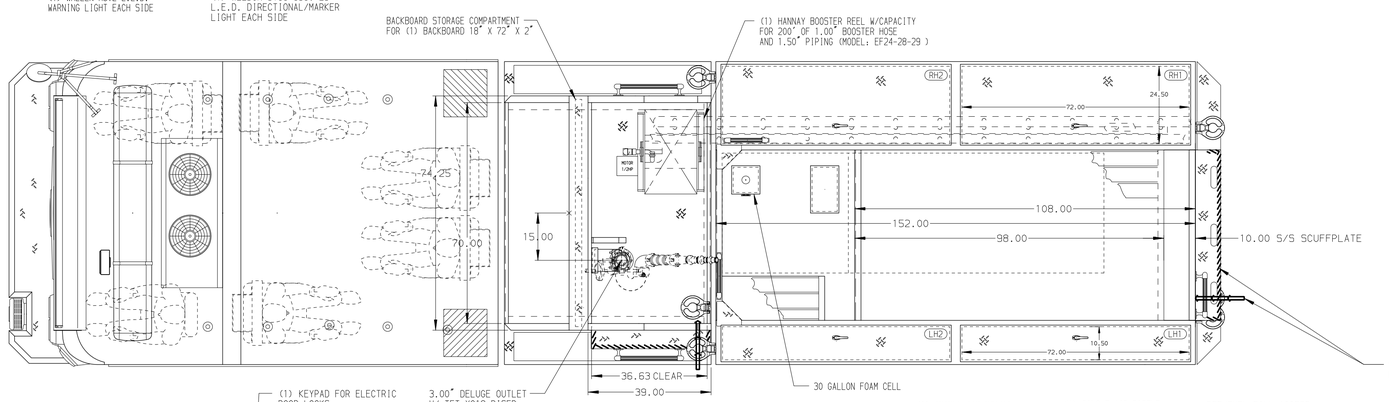


HOSEBED CAPACITIES

1 - 200' OF 3.00" HOSE
2 - 200' OF 3.00" HOSE
3 - 200' OF 3.00" HOSE
4 - 150' OF 2.50" HOSE (IN A 5.50" W X 22.00" H X 71.00" L ALUMINUM TRAY)
5 - 175' OF 1.75" HOSE (IN A 4.25" W X 22.00" H X 71.00" L ALUMINUM TRAY)
6 - 700' OF 5.00" HOSE

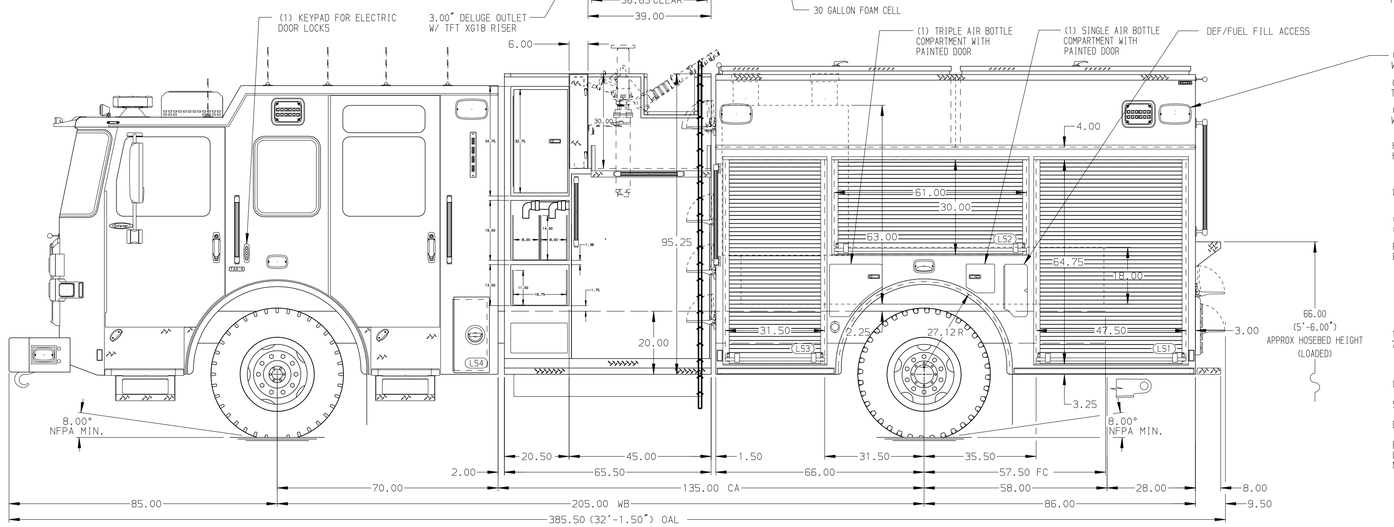


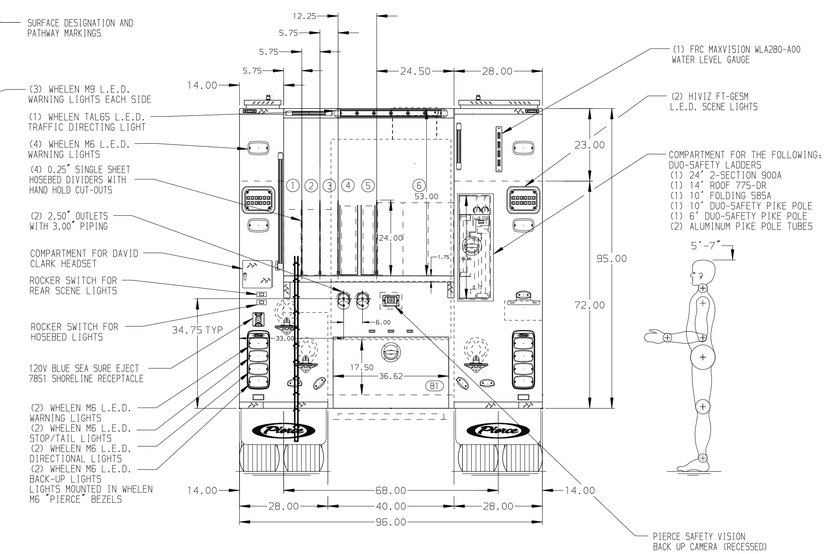


ALUMINUM BODY

SIDE ROLL AND FRONTAL IMPACT PROTECTION

NOTE

DIMENSIONS SHOWN ARE APPROXIMATE AND ARE SUBJECT TO MINOR DEVIATIONS AS MAY OCCUR OR BE NECESSARY IN CONSTRUCTION.
MINOR DETAILS NOT SHOWN.

1. BATTERY CHARGER LOCATED BEHIND DRIVER SEAT
2. BATTERY CHARGER INDICATOR LOCATED ON DRIVER'S SEAT RISER
3. MIC AND SPEAKER COMPARTMENT LOCATED ON DRIVER'S SIDE PUMP PAND
4. AIR INLET/OUTLET WITH DISCONNECT FITTING ON DS PUMP PANEL

| REV | DATE | BY | CH |
|---|---|---|---|
| E | 12APR24 | ARI | KBO |
| D | 09JAN24 | ARI | KBO |
| C | 05DEC23 | ARI | KBO |
| B | 26OCT23 | ARI | KBO |
| A | 14JUL23 | ARI | KBO |

CHASSIS DATA
MAKE: PIERCE
MODEL: ENFORCER

Pierce MANUFACTURING INC.

TITLE: 1500-D-530P,500G WATER-30G FOAM,152" PUMPER BODY
(2) SPEEDLAYS,(1) DEADLAY,LADDERS BTWN TANK & S.SHT

FOR: AUSTIN FIRE DEPARTMENT
AUSTIN, TEXAS

DWG NO. 39897AD-SH1

| JOB NO. | 39897 01-02 |
|---|---|
| SCALE 1:24 | DATE |
| DRAWN BY ARI | 28JUN23 |
| CHECKED BY KBO | 30JUN23 |
| SHEET SIZE D | SHEET NO. 1 OF 2 |

View File Created 12-APR-2024 12:30:25