PUMPER

BODY
Long Aluminum 2nd Gen Pumper

CHASSIS
Saber FR Chassis

CHASSIS

AXLE,FRONT,CUSTOM
18,000 lb Dana Axle

AXLE,REAR
24,000 lb Dana Axle

ENGINE
450 HP Cummins L9 Engine

TRANSMISSION
Allison 6th Gen, 3000 EVS P

BUMPER
22" Extended Painted Steel

CAB
6010 Saber FR Cab

BODY

WATER TANK
750 Gallon New York Style Water Tank

COMPT,PUMPER,REAR
30.75" FF Rollup Rear Compt

COMPT,PUMPER,LEFT SIDE
161" Rollup Full Height Front & Rear FDLER

COMPT,PUMPER,RIGHT SIDE
161" Rollup Full Height Front & Rear FDLER

FIRE SUPPRESSION

PUMPHOUSE
48" Control Zone Top Mount

PUMP
1250 GPM Waterous CS

CROSSLAYS,1.50"
1.50" Crosslays Not Required

CROSSLAYS,2.50"
(1) 2.50" Standard Capacity

SPEEDLAYS
(2) 1.50" W/Tray Std. Capacity

GENERATOR
Generator Not Required

Foam System
Foam System Not Required

Foam Cell
Foam Cell Not Required

Side Roll and Frontal Impact Protection

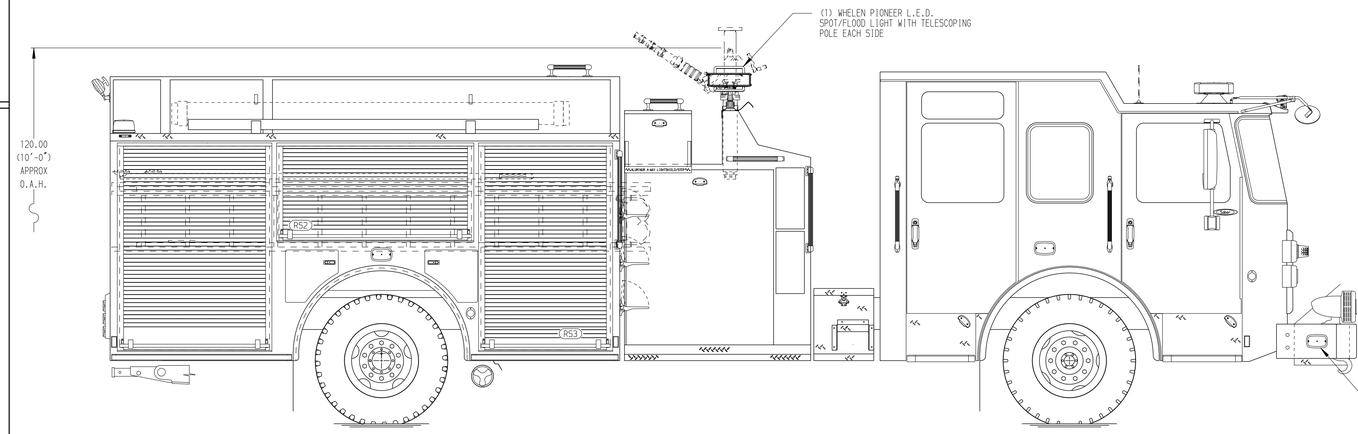

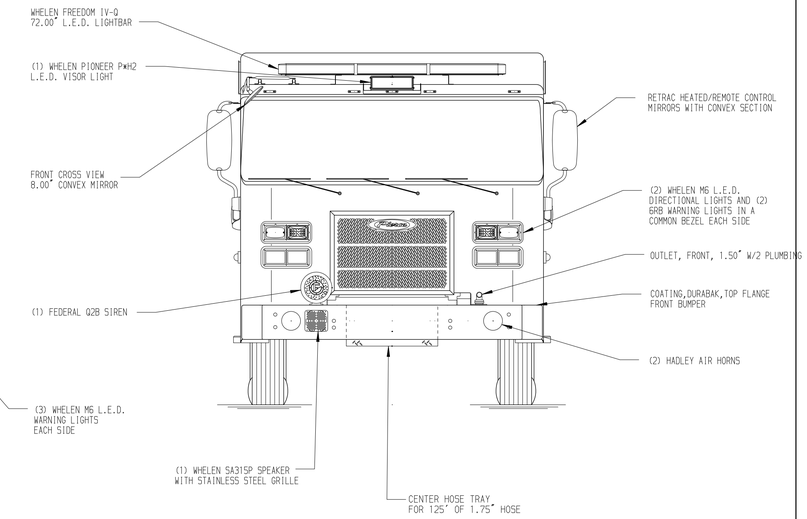

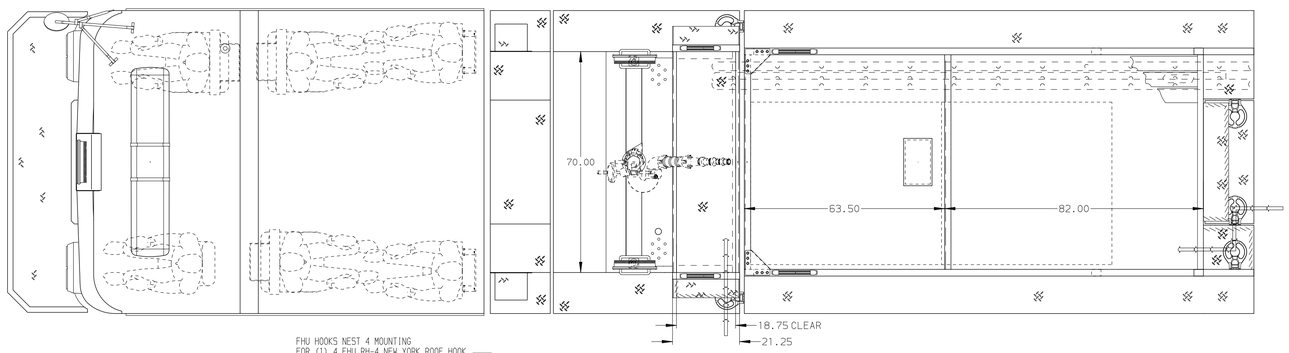

HOSEBED CAPACITY

BED 1
200' OF 2.50" D.J. POLY HOSE

BED 2
1000' OF 5.00" D.J. POLY HOSE

BED 3
250' OF 2.50" D.J. POLY HOSE

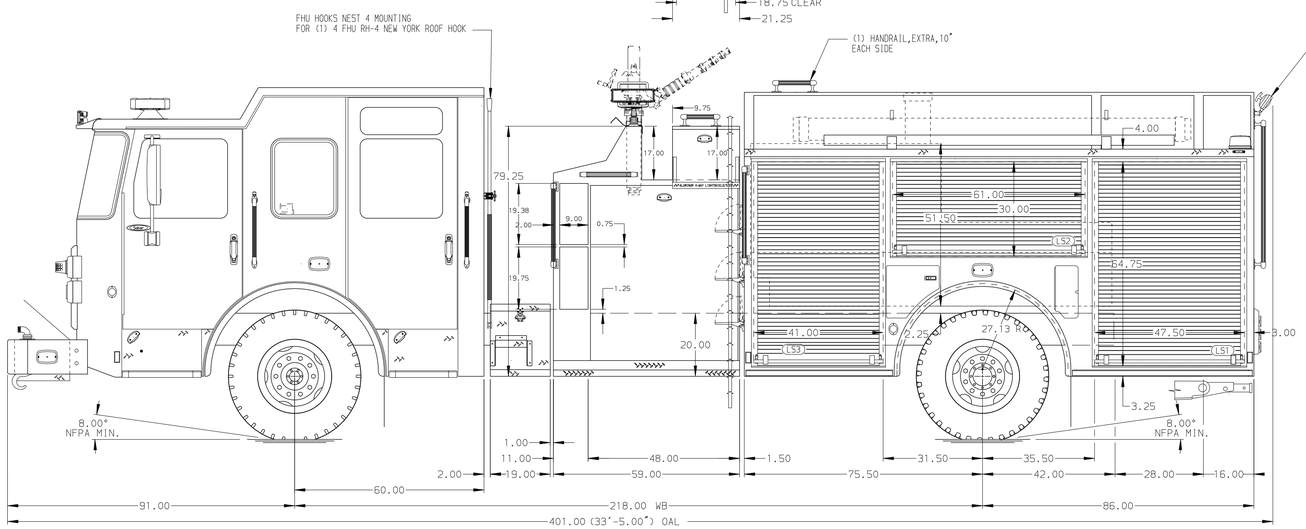

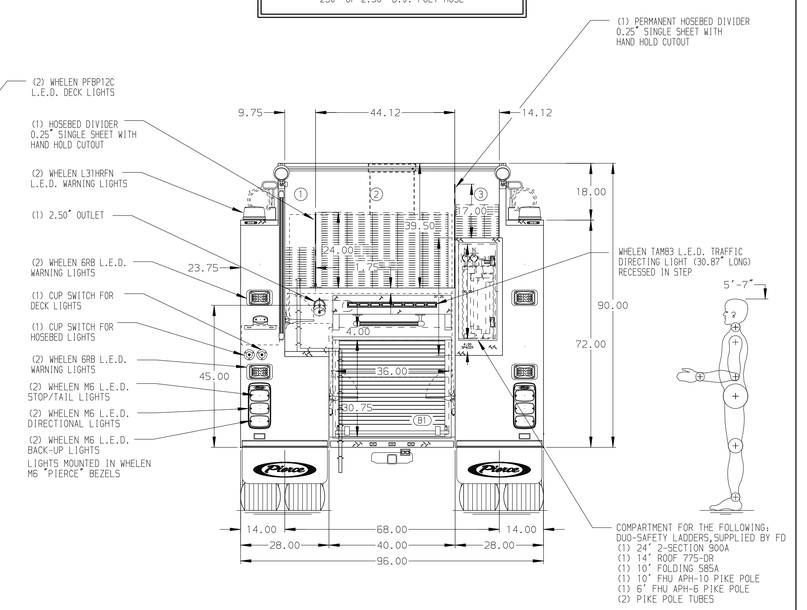

NOTE
DIMENSIONS SHOWN ARE APPROXIMATE AND ARE SUBJECT TO MINOR DEVIATIONS AS MAY OCCUR OR BE NECESSARY IN CONSTRUCTION.
MINOR DETAILS NOT SHOWN.

REV	DATE	BY	CH
B	03NOV23	RWR	CCS
A	26JUL23	VHO	CCS

CHASSIS DATA
MAKE: PIERCE
MODEL: SABER FR

Pierce MANUFACTURING INC.

TITLE: Pierce Pumper Approval Drawing –
FOR: Fort Wayne Fire Department –
DWG NO.: 40293AD

JOB NO.	22MAY23 01-02
SCALE	1:24
DATE	
DRAWN BY	WRE 22MAY23
CHECKED BY	MMF 22MAY23
SHEET SIZE	D
SHEET NO.	1 OF 1

View File Created 07-NOV-2023 07:02:37