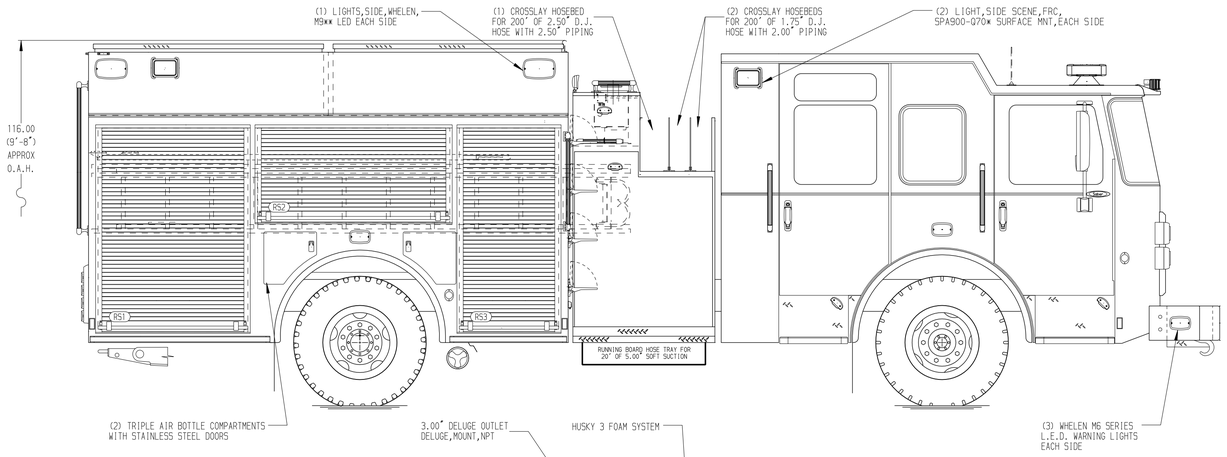

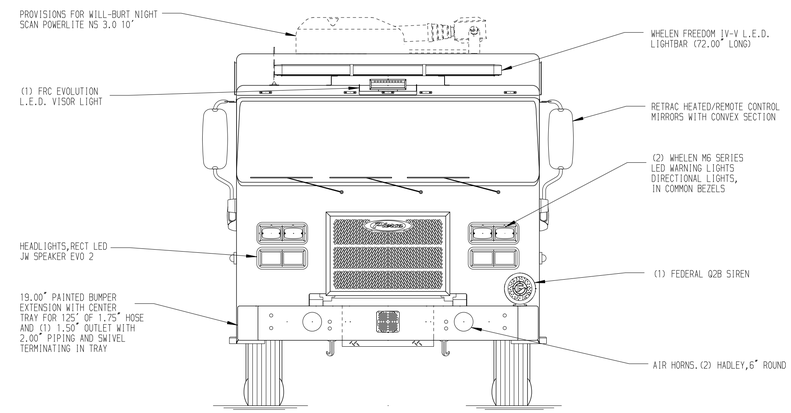

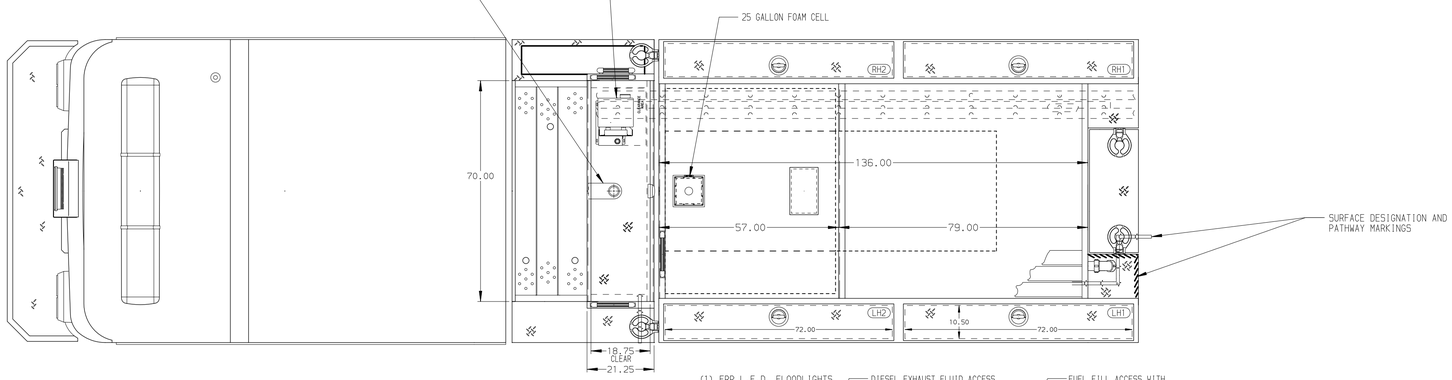

HOSEBED CAPACITIES

1 - 1000' OF 5.00" D.J. POLY HOSE
2 - 500' OF 2.50" D.J. POLY HOSE

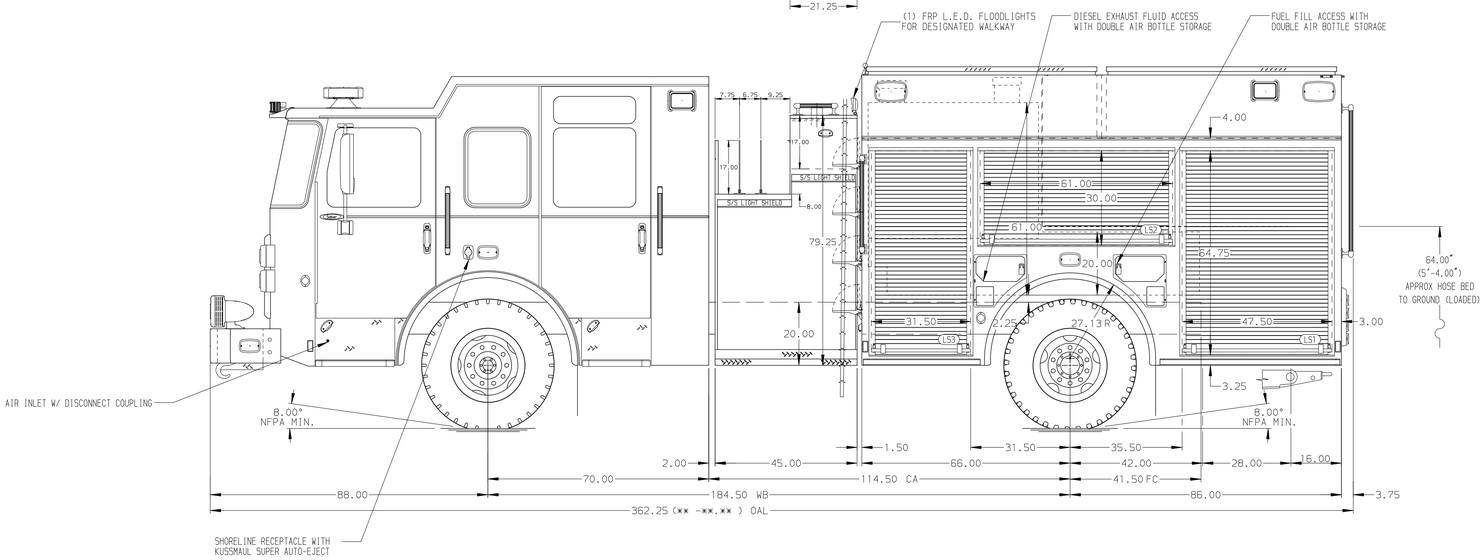

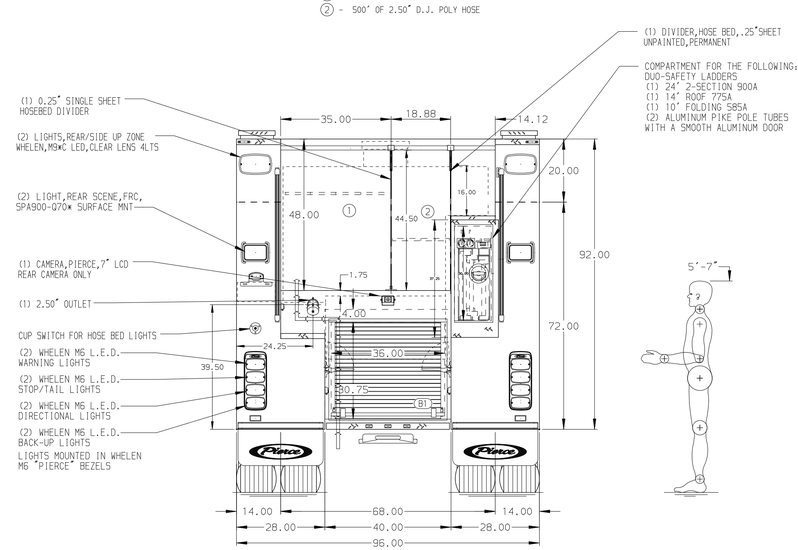

ALUMINUM BODY

NOTE

DIMENSIONS SHOWN ARE APPROXIMATE AND ARE SUBJECT TO MINOR DEVIATIONS AS MAY OCCUR OR BE NECESSARY IN CONSTRUCTION.
MINOR DETAILS NOT SHOWN.

REV	DATE	BY	CH
7	-	-	-

CHASSIS DATA
MAKE: PIERCE
MODEL: SABER FR

Pierce MANUFACTURING INC.
BRADENTON, FLORIDA

TITLE: 1500-D-750P, 725G WATER, 25G FOAM, 152" FDLER PUMPER LADDERS BTWN TANK & SS, (3) CROSSLAYS, DELUGE

FOR: PIERCE FIELD UNIT
BRADENTON, FLORIDA

DWG NO.: 40395AD

JOB NO.	40395
SCALE	1:24
DATE	08FEB23
DRAWN BY	JLA
CHECKED BY	CAG
DATE	09FEB23
SHEET SIZE	D
SHEET NO.	1 OF 1

View File Created 09-FEB-2023 06:59:14