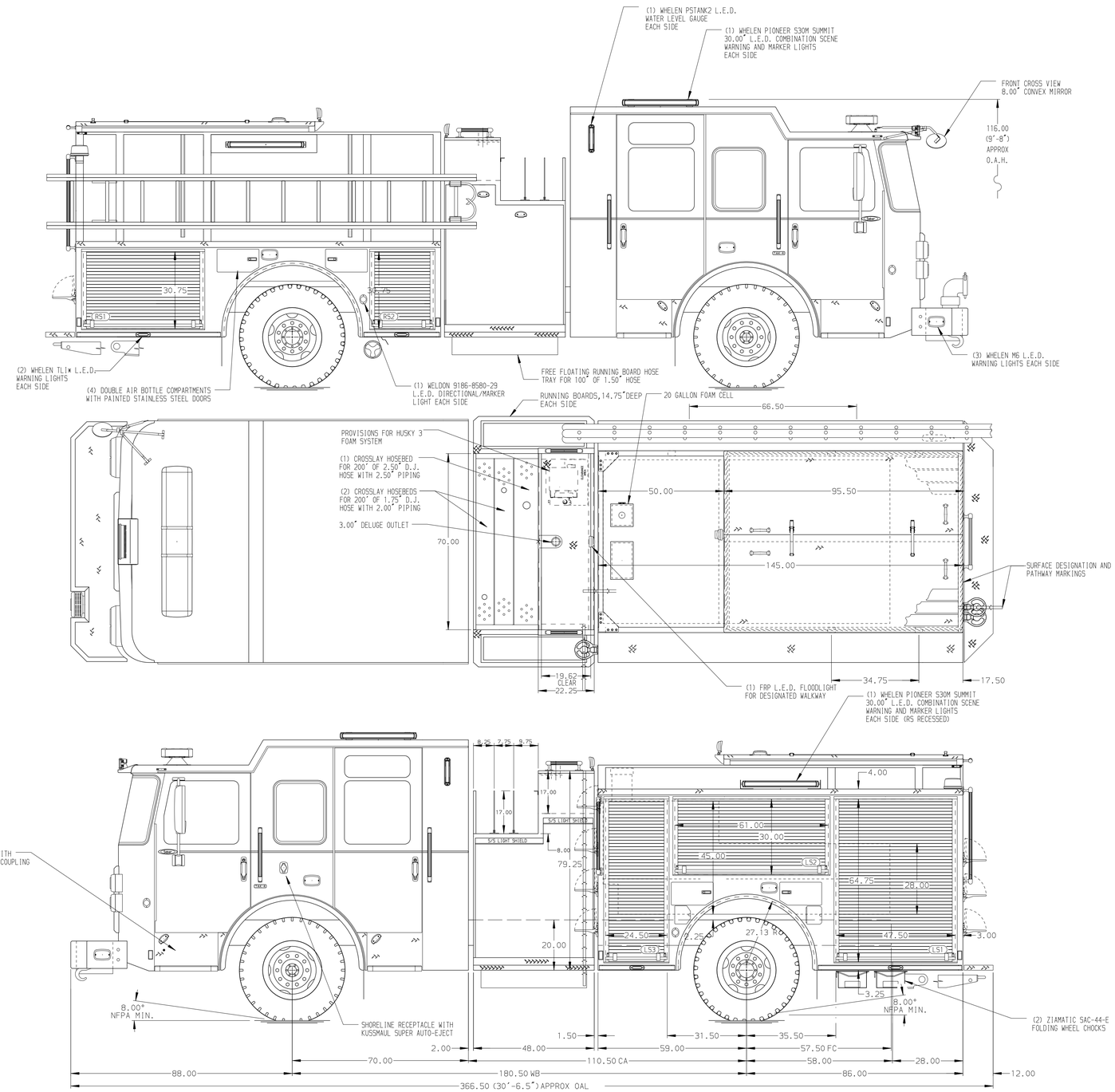

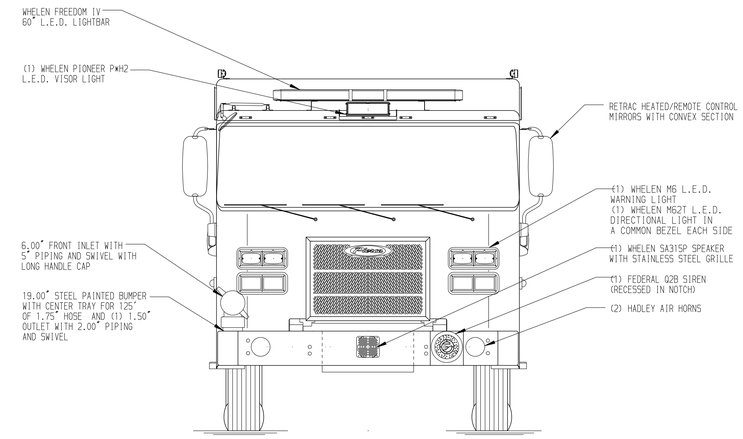

HOSEBED CAPACITIES

1. 250' OF 2.50" D.J. HOSE
2. 250' OF 2.50" D.J. HOSE
3. 800' OF 3.00" D.J. HOSE
4. 1200' OF 4.00" D.J. HOSE
5. 400' OF 1.75" D.J. HOSE

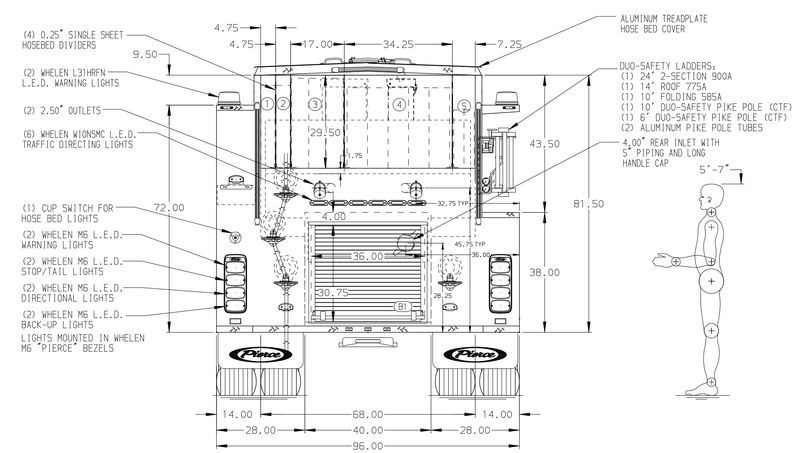

ALUMINUM BODY

SIDE ROLL AND FRONTAL IMPACT PROTECTION

NOTE

DIMENSIONS SHOWN ARE APPROXIMATE AND ARE SUBJECT TO MINOR DEVIATIONS AS MAY OCCUR OR BE NECESSARY IN CONSTRUCTION.
MINOR DETAILS NOT SHOWN.

REV	DATE	BY	CH
4	21AUG23	VHO	JAP
3	23JUN23	RHU	JAP
2	24APR23	LME	THS
1	20APR23	LME	EGO

CHASSIS DATA — MAKE: PIERCE — MODEL: SABER FR

Pierce MANUFACTURING INC.

TITLE: 1500-D-770P, 750 WATER W/20 FOAM, 145" BODY (3) CROSSLAYS, RS LADDER BRACKETS

FOR: PIERCE FIELD UNIT BRADENTON, FLORIDA

DWG NO.: 40670AD

JOB NO.	40670
SCALE	1:24
DATE	
DRAWN BY	LME
13APR22	
CHECKED BY	CZA
13APR23	
SHEET SIZE	D
SHEET NO.	1 OF 1

View File Created 21-AUG-2023 10:38:27