# PUMPER

## BODY
Medium Aluminum 2nd Gen Pumper

## CHASSIS
Enforcer Chassis

# CHASSIS

## AXLE, FRONT, CUSTOM
18,000 lb Oshkosh Tak-4 Axle

## AXLE, REAR
24,000 lb Meritor Axle

## ENGINE
455 HP Cummins X12

## TRANSMISSION
Allison 5th Gen, 3000 EVS P

## BUMPER
19" Extended Painted Steel

## CAB
7010 Enforcer Cab

# BODY

## WATER TANK
750 Gallon New York Style Water Tank

## COMPT, PUMPER, REAR
30.75" FF Rollup Rear Compt

## COMPT, PUMPER, DRIVER SIDE
152" Rollup Full Height Front & Rear FDLER

## COMPT, PUMPER PASS. SIDE
152" Rollup Full Height Front & Rear FDLER

# FIRE SUPPRESSION

## PUMPHOUSE
48" Control Zone Side Mount

## PUMP
1500 GPM Waterous CSU

## CROSSLAYS, 1.50"
(2) 1.50" Standard Capacity

## CROSSLAYS, 2.50"
(1) 2.50" Standard Capacity

## SPEEDLAYS
Speedlays Not Required

## GENERATOR
Generator Not Required

## Foam System
Husky 3 Foam System

## Foam Cell
20 Gallon Foam Cell, Not Reduced Water

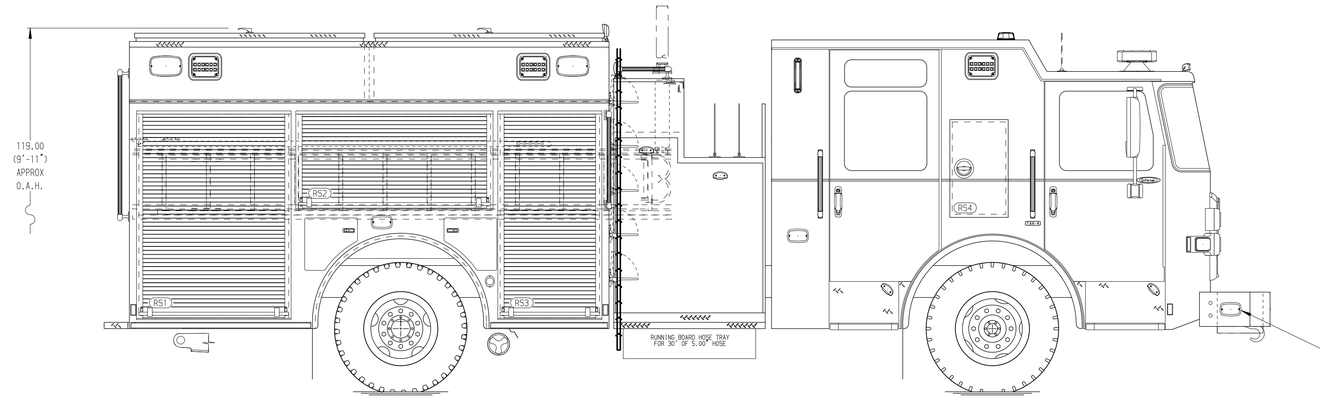


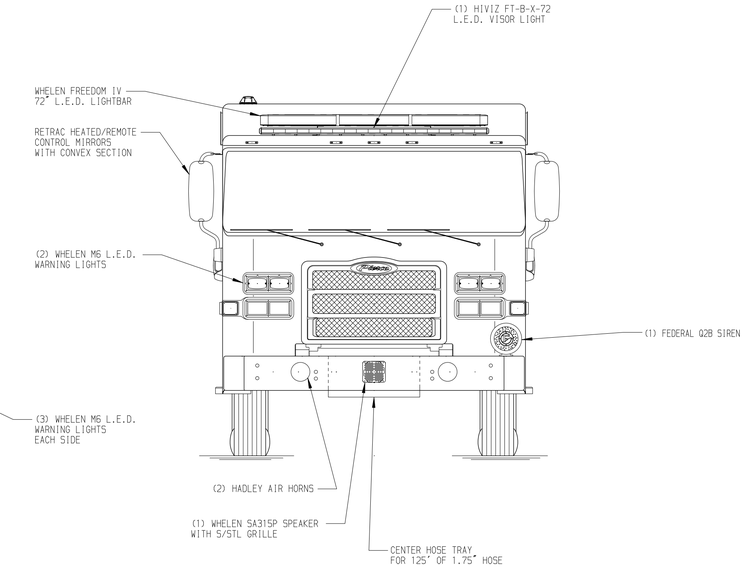


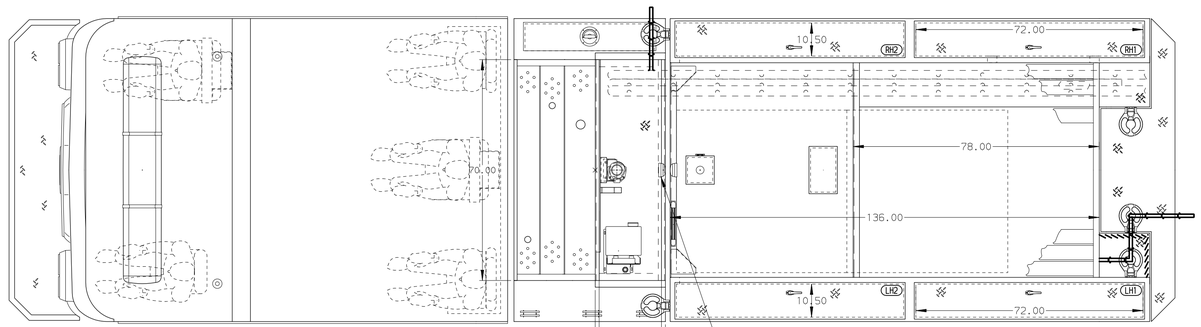


## HOSEBED CAPACITY

**BED 1**
500' OF 3.00" D.J. POLY HOSE

**BED 2**
1000' OF 5.00" D.J. POLY HOSE

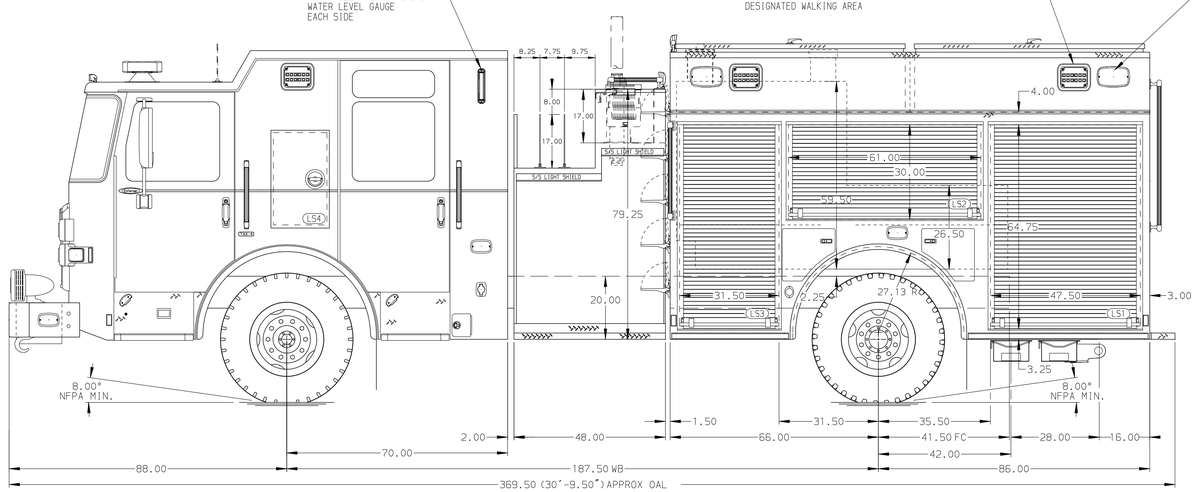


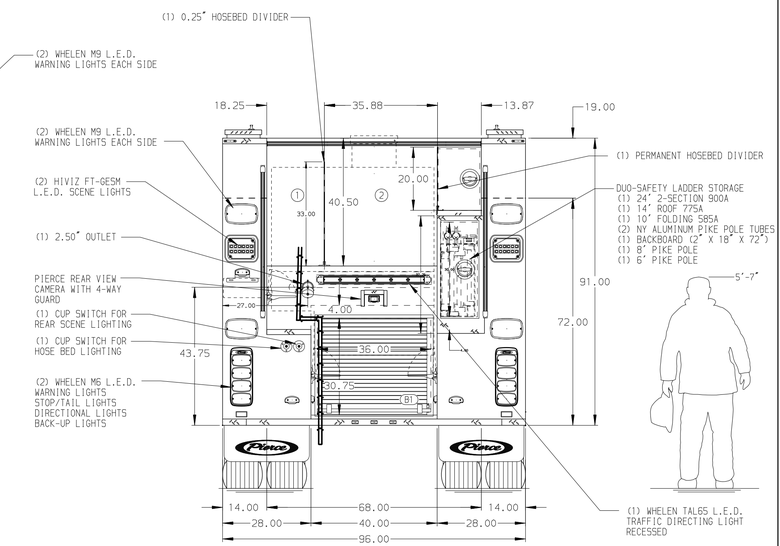


NOTE

DIMENSIONS SHOWN ARE APPROXIMATE AND ARE SUBJECT TO MINOR DEVIATIONS AS MAY OCCUR OR BE NECESSARY IN CONSTRUCTION.
MINOR DETAILS NOT SHOWN.

1. ONE 1.50 OUTLET WITH 2.00 PIPING AND SWIVEL LOCATED IN CENTER BUMPER TRAY
2. SHORELINE RECEPTACLE WITH KUSSMAUL SUPER AUTO-EJECT LOCATED ON DRIVER SIDE OF CREW CAB
3. AIR INLET WITH DISCONNECT COUPLING IN THE DRIVER SIDE STEPWELL
4. BATTERY CHARGER LOCATED BEHIND DRIVER'S SEAT
5. FIVE ADJUSTABLE SHELVES IN COMPARTMENTS PER SHOP ORDER
6. TWO 120V RECEPTACLES LOCATED PER SHOP ORDER
7. TWO FLOOR MOUNTED TRAYS LOCATED IN COMPARTMENT PER SHOP ORDER

**CUSTOMER APPROVAL**

APPROVED BY: _____

DATE: _____

| REV | DATE | BY | CH |
|---|---|---|---|
| - | - | - | - |

| | |
|---|---|
| CHASSIS DATA | |
| MAKE | PIERCE |
| MODEL | ENFORCER |
| TITLE | Pierce Pumper Approval Drawing - |
| FOR | Pierce Stock Field Unit - |
| DWG NO. | 40689AD |

Pierce MANUFACTURING INC.

| | |
|---|---|
| JOB NO. | 40689 |
| SCALE | 1:24 |
| DATE | |
| DRAWN BY | WRE |
| | 3APR23 |
| CHECKED BY | COL |
| | 03APR23 |
| SHEET SIZE | D |
| SHEET NO. | 1 OF 1 |

View File Created 03-APR-2023 10:17:14