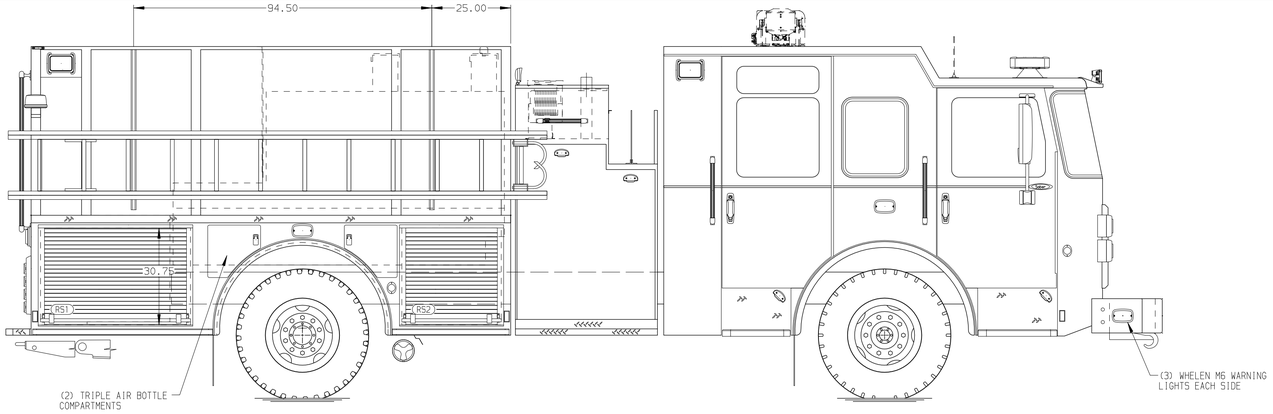

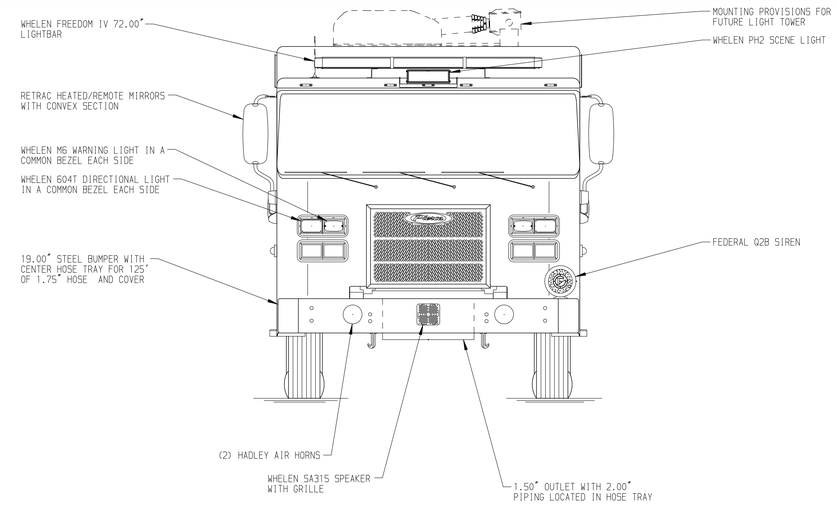

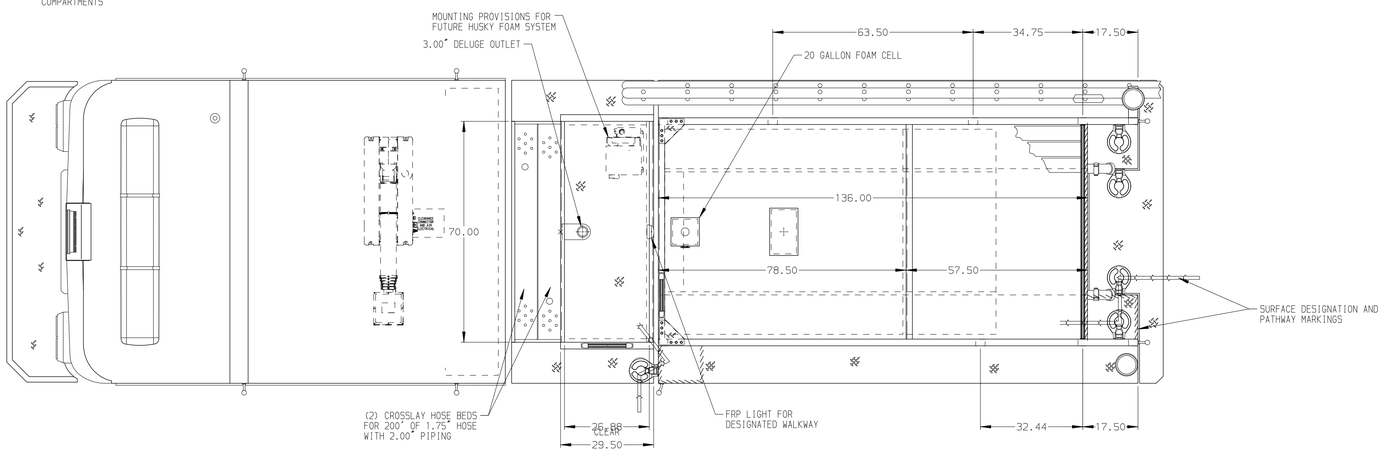

HOSEBED CAPACITIES

1. 1000' OF 5.00" D.J. POLY HOSE
2. 500' OF 2.50" D.J. POLY HOSE

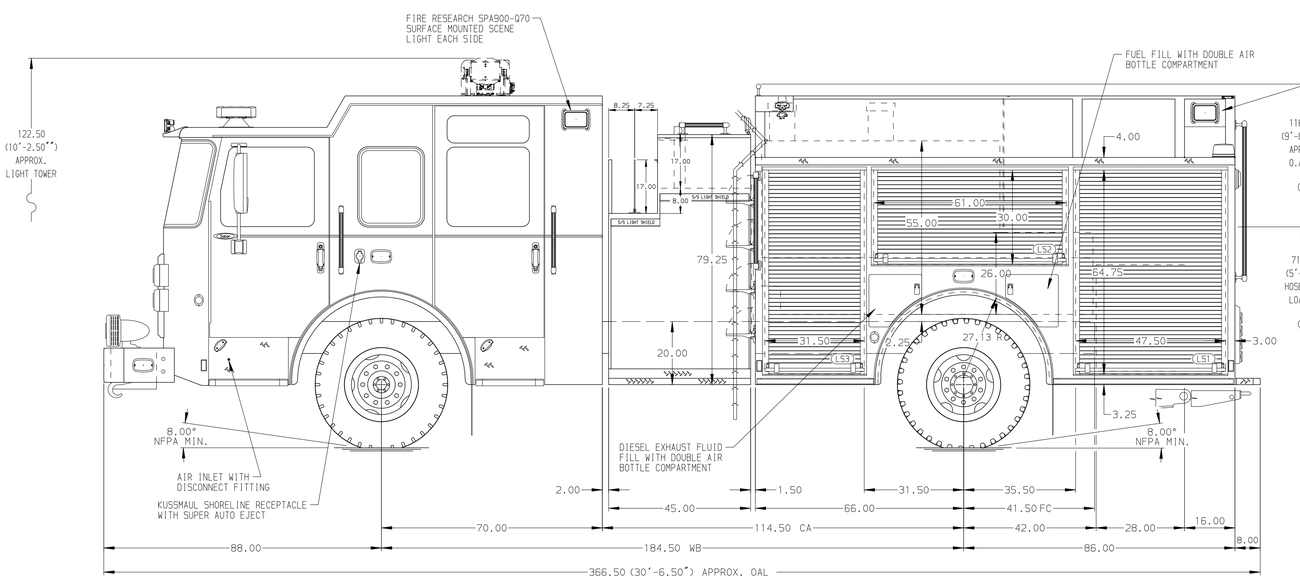

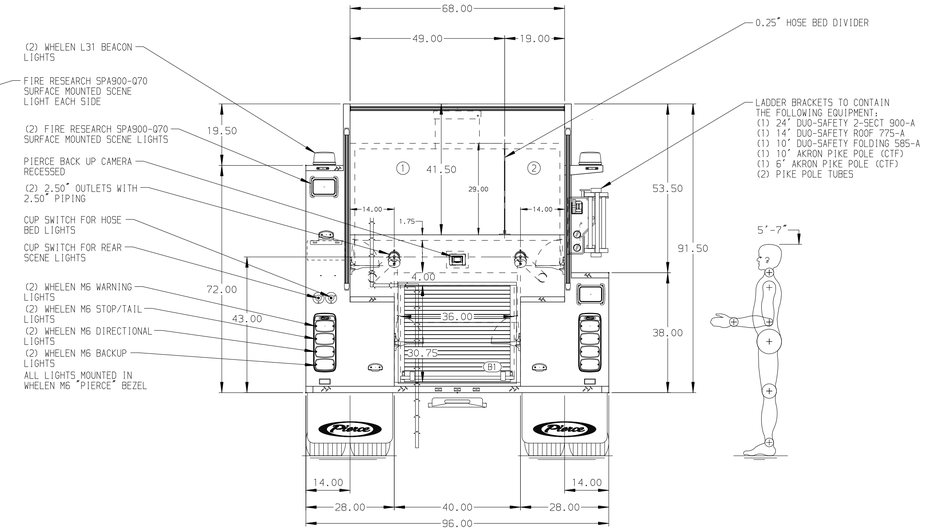

ALUMINUM BODY

NOTE

DIMENSIONS SHOWN ARE APPROXIMATE AND ARE SUBJECT TO MINOR DEVIATIONS AS MAY OCCUR OR BE NECESSARY IN CONSTRUCTION.
MINOR DETAILS NOT SHOWN.

1. BATTERY CHARGER LOCATED PER ORDER
2. BATTERY CHARGER INDICATOR LOCATED PER ORDER
3. FIVE FULL WIDTH/DEPTH ADJUSTABLE SHELVES WITH SIDES LOCATED PER ORDER
4. FOUR FLOOR MOUNTED SLIDE-OUT TRAYS WITH SIDES LOCATED PER ORDER

REV	DATE	BY	CH
V	24JAN24	RWR	CAG
V	04AUG23	VHO	JAP
V	06JUN23	RWR	JAP
V	13APR23	BST	EGO

CHASSIS DATA
MAKE: PIERCE
MODEL: SABER FR

Pierce MANUFACTURING INC.

TITLE: 1500-D-1000P,980 GAL WATER W/20 GAL FOAM CELL 152" PUMPER BODY,RIGHT SIDE LADDER BRACKETS
FOR: PENDER EMS AND FIRE BURGAW, NORTH CAROLINA
DWG NO.: 40691AD

JOB NO.	40691
SCALE	1:24
DATE	
DRAWN BY	BST 31MAR23
CHECKED BY	EGO 31MAR23
SHEET SIZE	D
SHEET NO.	1 OF 1

View File Created 01-FEB-2024 07:01:21