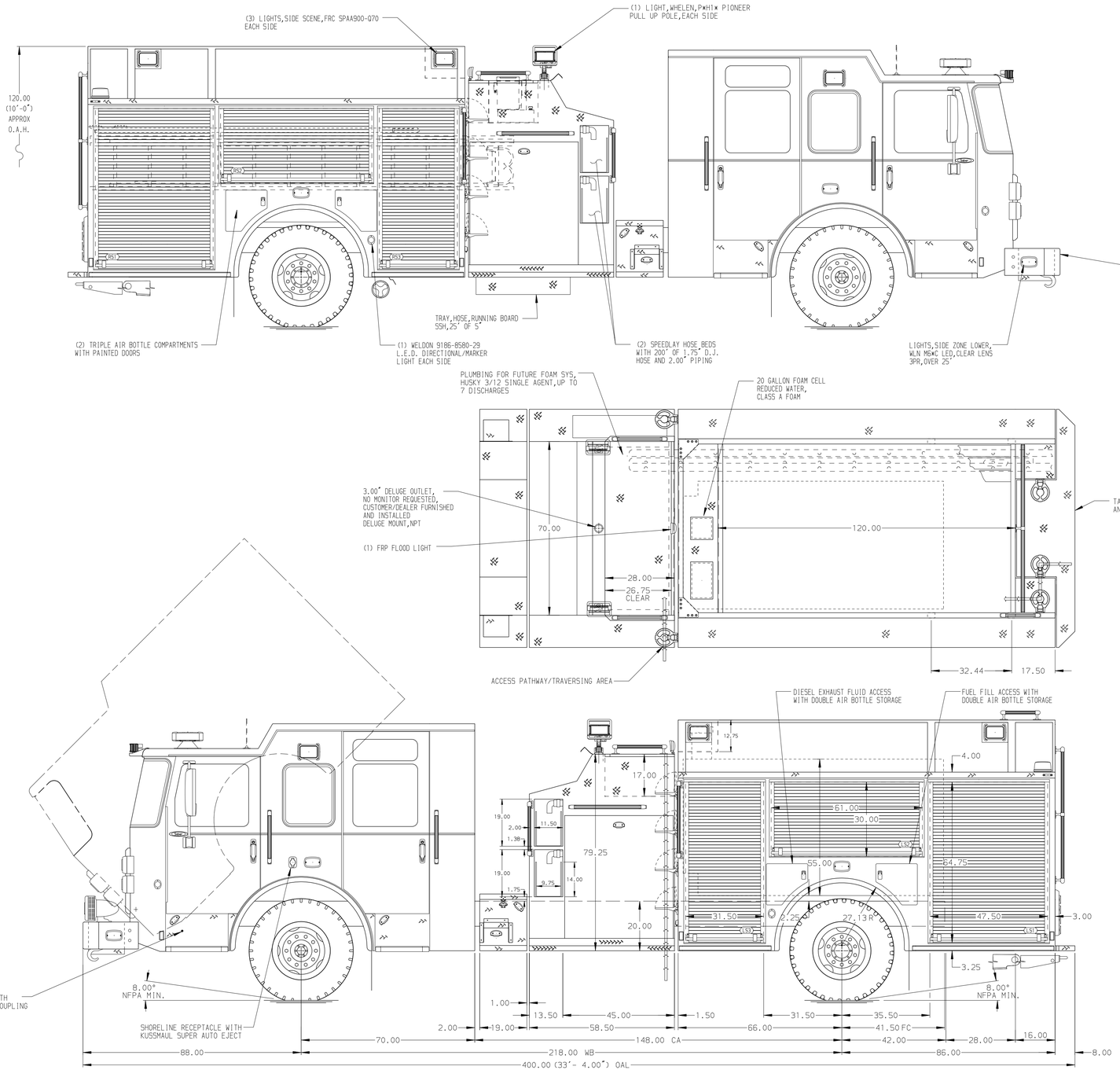

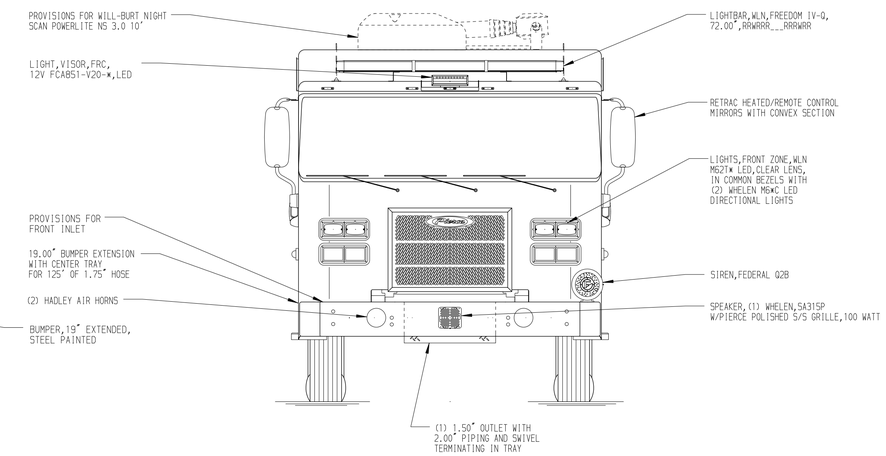

HOSEBED CAPACITIES

1. 400' OF 2.50" D.J. HOSE
2. 1000' OF 5.00" D.J. HOSE

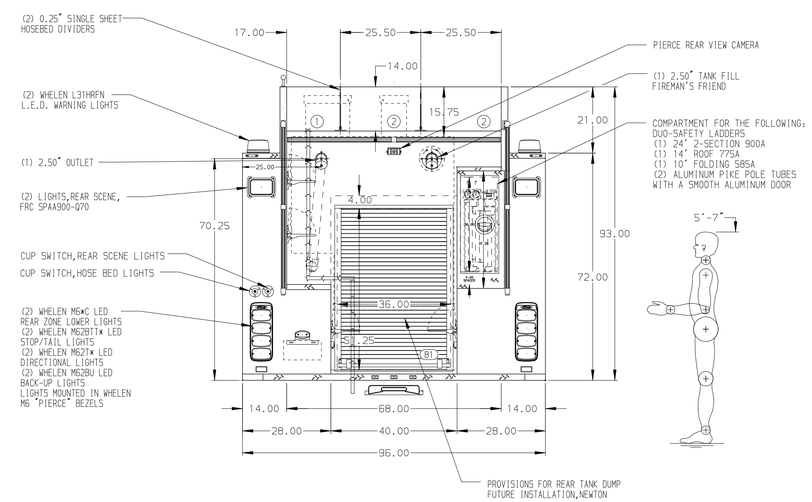

ALUMINUM BODY

NOTE

DIMENSIONS SHOWN ARE APPROXIMATE AND ARE SUBJECT TO MINOR DEVIATIONS AS MAY OCCUR OR BE NECESSARY IN CONSTRUCTION.
MINOR DETAILS NOT SHOWN.

REV	DATE	BY	CH
▽	-	-	-

CUSTOMER APPROVAL

APPROVED BY: _____

DATE: _____

Pierce MANUFACTURING INC.

CHASSIS DATA	TITLE	1500-D-980P,W/20 GAL FOAM SYSTEM 152" PUMPER BODY, TOP CONTROL, LADDERS BESIDE TANK	JOB NO. 40711
MAKE: PIERCE	FOR	PIERCE FIELD UNIT BRADENTON, FLORIDA	SCALE 1:24 / DATE
MODEL: SABER FR	DWG NO.	40711AD	DRAWN BY KLE 24MAR23
			CHECKED BY JAP 24MAR23
			SHEET SIZE D / SHEET NO. 1 OF 1

View File Created 24-MAR-2023 14:12:24