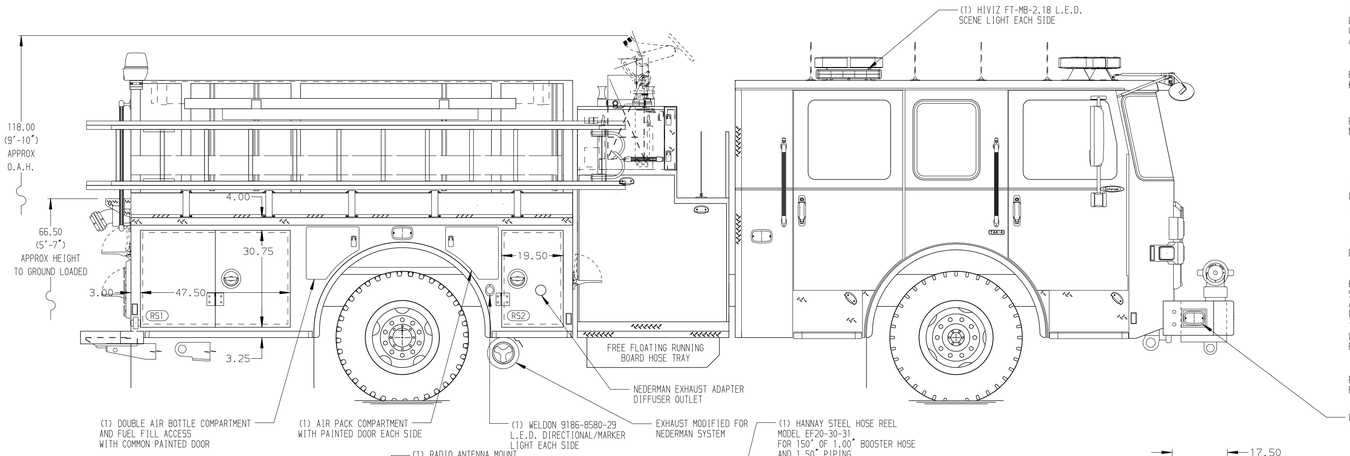

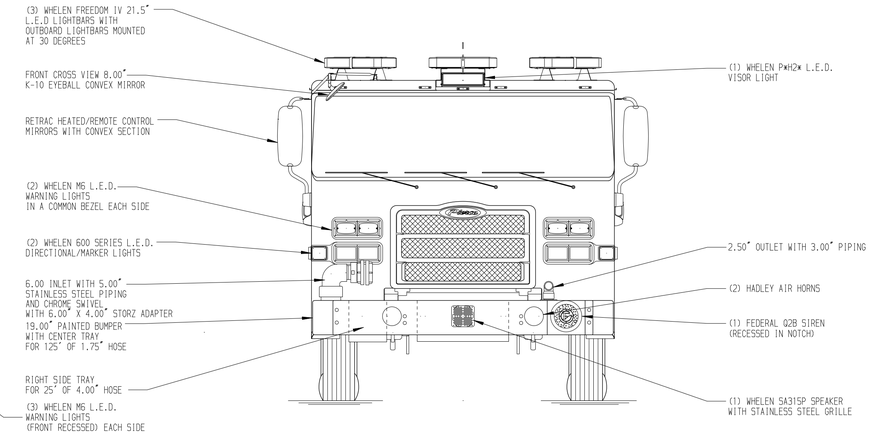

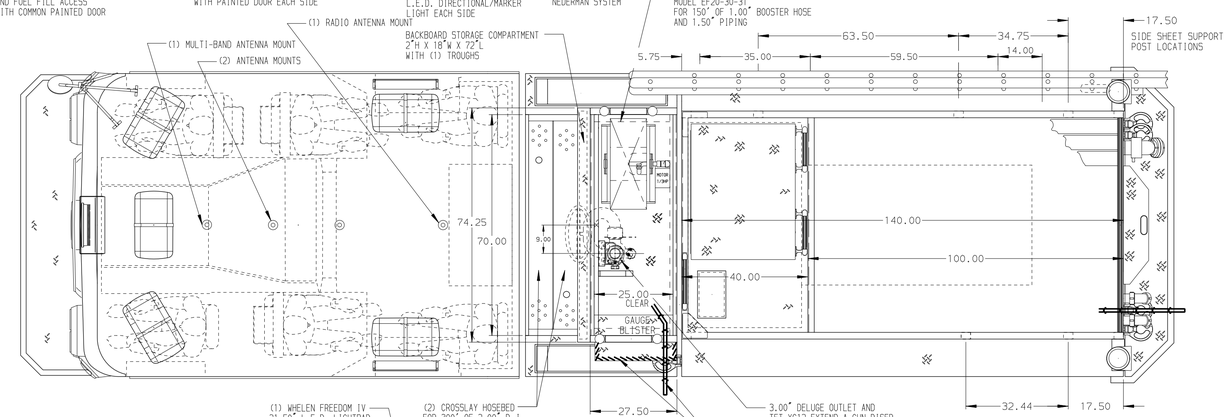

ISOLATION TAPE*

HOSEBED CAPACITIES
1 - 400' OF 1.75" HOSE
2 - 250' OF 2.50" HOSE
3 - 500' OF 3.00" HOSE
4 - 1000' OF 4.00" HOSE

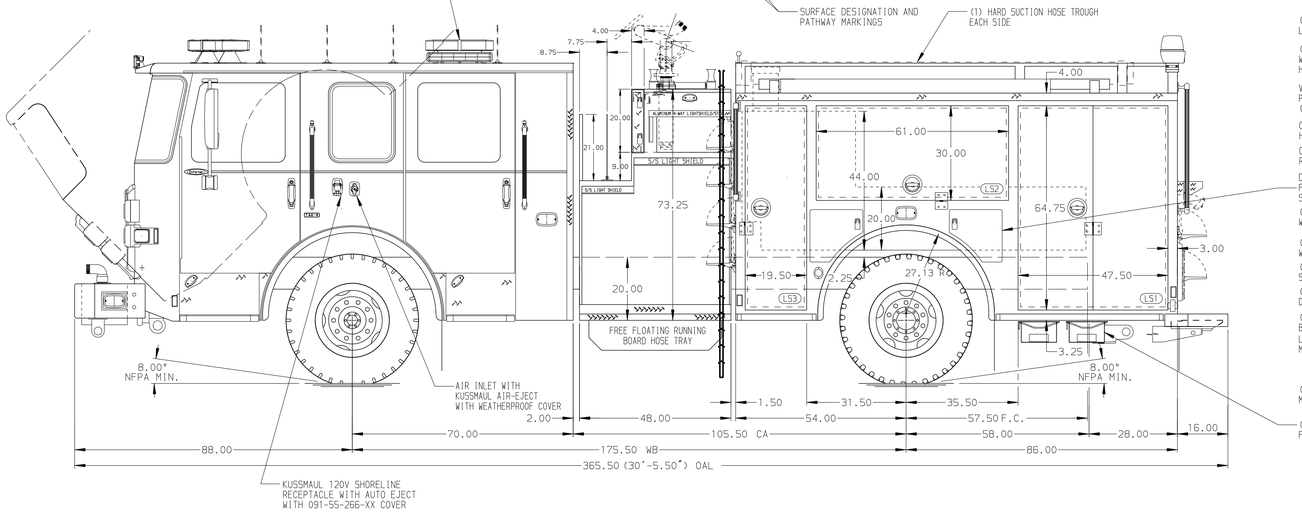

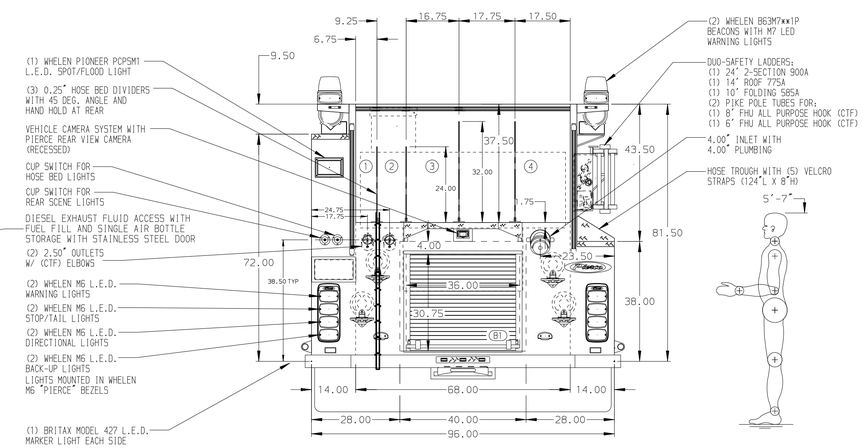

ALUMINUM BODY | MAXIMUM O.A.L. 384" | MAXIMUM O.A.H. 118" | SIDE ROLL & FRONTAL IMPACT PROTECTION

NOTE
DIMENSIONS SHOWN ARE APPROXIMATE AND ARE SUBJECT TO MINOR DEVIATIONS AS MAY OCCUR OR BE NECESSARY IN CONSTRUCTION.
MINOR DETAILS NOT SHOWN.

1. VOGEL LUBE SYSTEM PUMP LOCATED PER SHOP ORDER
2. BATTERY CHARGER LOCATED BEHIND DRIVER SEAT

REV	DATE	BY	CH
V	10OCT23	MMF	JBL

CHASSIS DATA
MAKE: PIERCE
MODEL: ENFORCER

Pierce MANUFACTURING INC.

TITLE: 1500-D-500P WATER, 140" SHORT BODY, FH F&R DS, LOW PS (2)XLAYS, (1)BACKBOARD, (2)HSH TROUGHS, DELUGE, NYHB
FOR: BALTIMORE CITY FIRE DEPARTMENT BALTIMORE, MARYLAND
DWG NO.: 40952AD-SH1

JOB NO.	40952 01-02
SCALE	1:24
DATE	
DRAWN BY	MMF
CHECKED BY	AMI
	16AUG23
	09OCT23
SHEET SIZE	D
SHEET NO.	1 OF 1

View File Created 10-OCT-2023 13:37:08