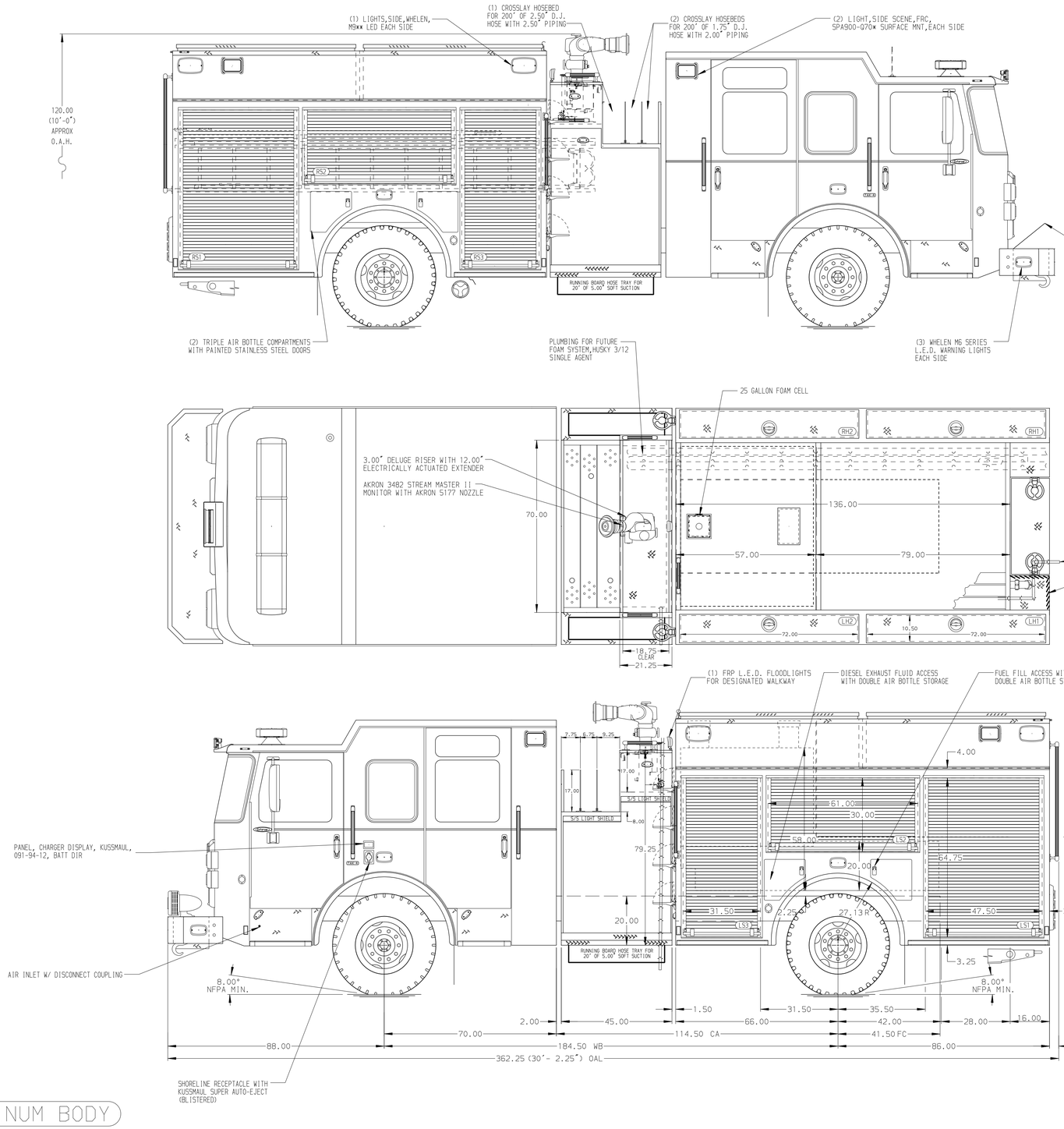

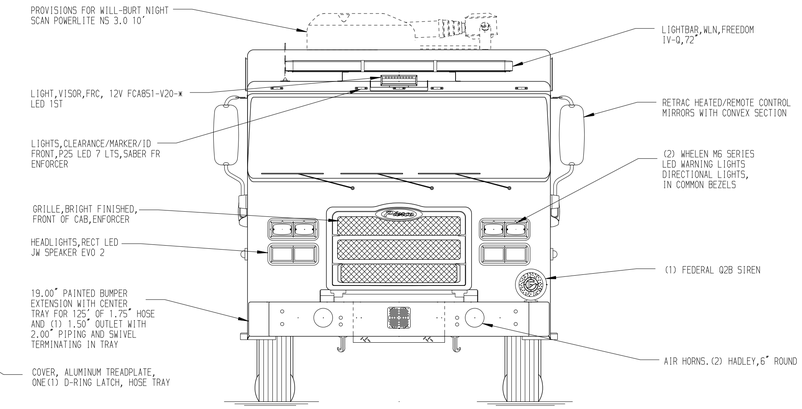

HOSEBED CAPACITIES

① - 1000' OF 5.00" D.J. POLY HOSE
② - 500' OF 2.50" D.J. POLY HOSE

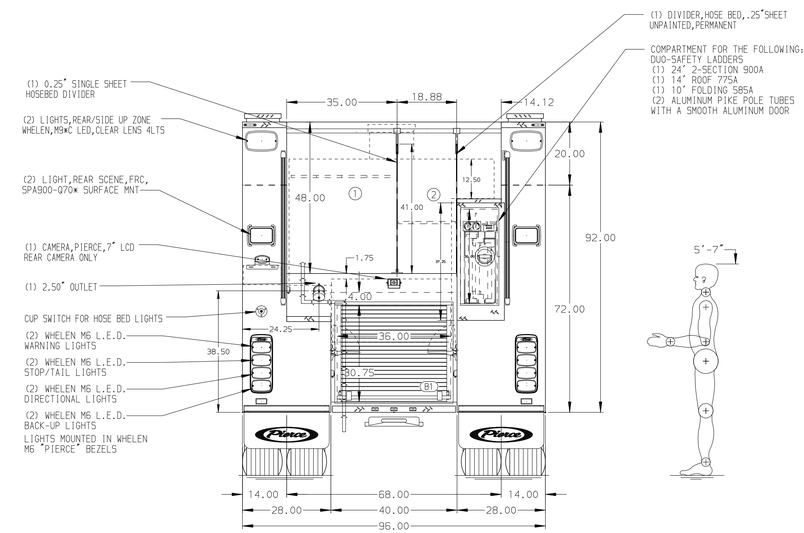

ALUMINUM BODY

NOTE

DIMENSIONS SHOWN ARE APPROXIMATE AND ARE SUBJECT TO MINOR DEVIATIONS AS MAY OCCUR OR BE NECESSARY IN CONSTRUCTION.
MINOR DETAILS NOT SHOWN.

REV	DATE	BY	CH
V	21NOV23	VHO	JAP

CHASSIS DATA
MAKE: PIERCE
MODEL: ENFORCER FLA

Pierce MANUFACTURING INC.
BRADENTON, FLORIDA

TITLE: 1500-D-750P, 725G WATER, 25G FOAM, 152" FDLER PUMPER LADDERS BTWN TANK & SS, (3) CROSSLAYS, DELUGE
FOR: VASHON ISLAND FIRE & RESCUE, VASHON, WA
DWG NO.: 41198AD

JOB NO.	41198
SCALE	1:24
DATE	
DRAWN BY	RWR 15AUG23
CHECKED BY	JAP 14AUG23
SHEET SIZE	D
SHEET NO.	1 OF 1

View File Created 22-NOV-2023 11:55:05