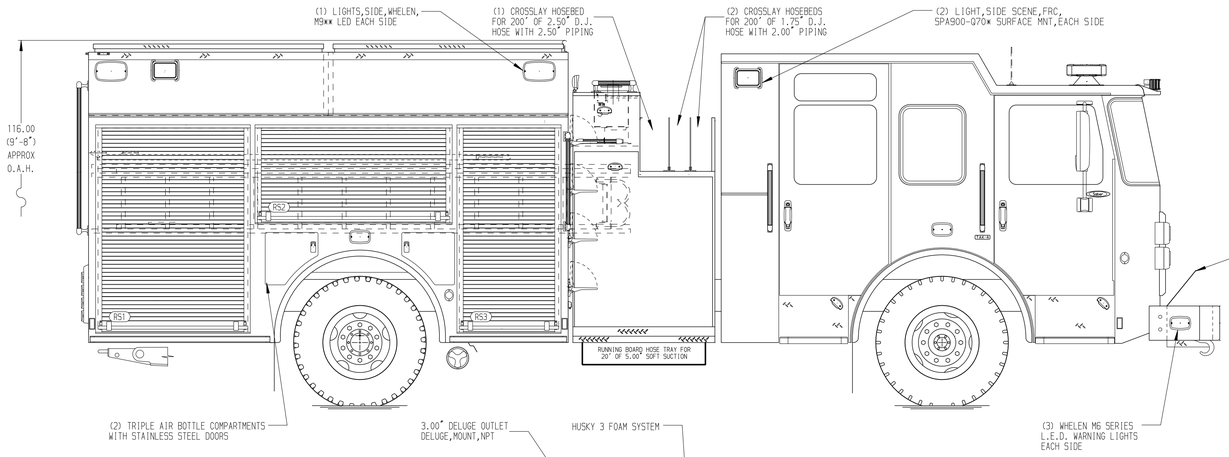

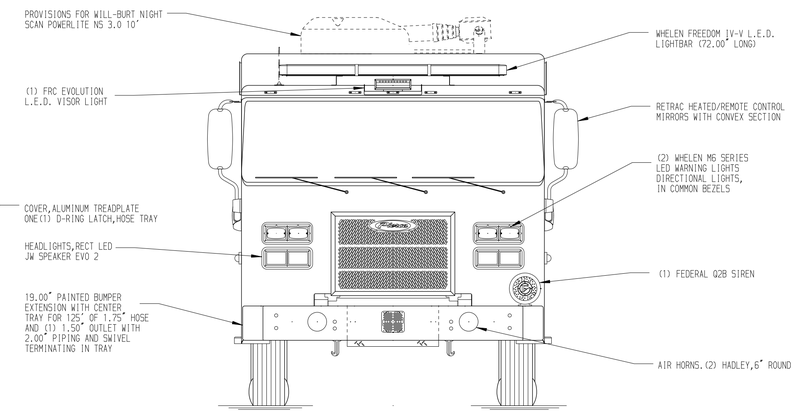

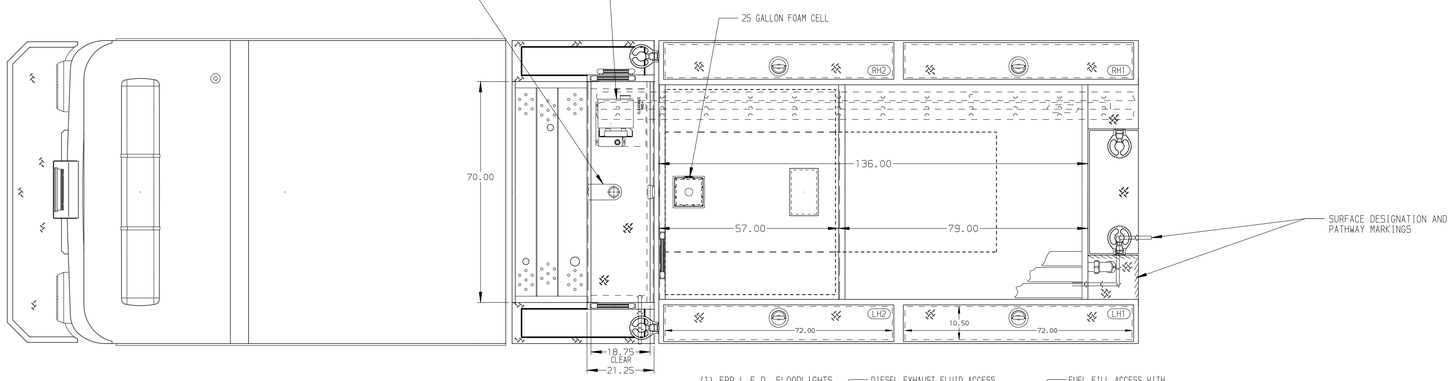

HOSEBED CAPACITIES

1 - 1000' OF 5.00" D.J. POLY HOSE
2 - 500' OF 2.50" D.J. POLY HOSE

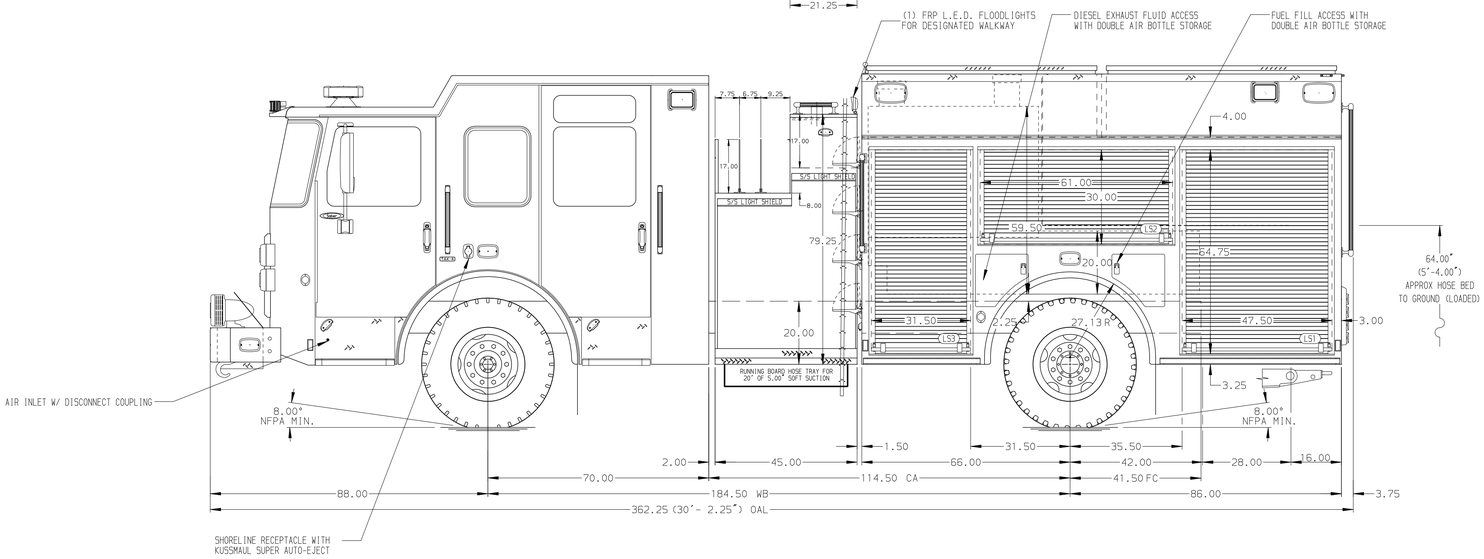

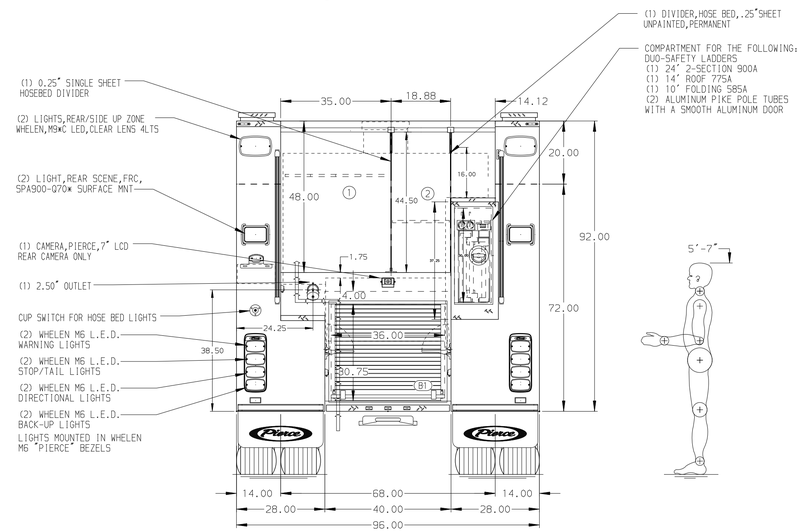

ALUMINUM BODY

NOTE

DIMENSIONS SHOWN ARE APPROXIMATE AND ARE SUBJECT TO MINOR DEVIATIONS AS MAY OCCUR OR BE NECESSARY IN CONSTRUCTION.
MINOR DETAILS NOT SHOWN.

REV	DATE	BY	CH
▽	-	-	-

CHASSIS DATA
MAKE: PIERCE
MODEL: SABER FR

Pierce MANUFACTURING INC.
BRADENTON, FLORIDA

TITLE: 1500-D-750P, 725G WATER, 25G FOAM, 152" FDLER PUMPER LADDERS BTWN TANK & SS, (3) CROSSLAYS, DELUGE
FOR: PIERCE FIELD UNIT BRADENTON, FLORIDA
DWG NO.: 41246AD

JOB NO.	41246
SCALE	1:24
DATE	030CT23
DRAWN BY	RHU
CHECKED BY	JAP
SHEET SIZE	D
SHEET NO.	1 OF 1

View File Created 04-OCT-2023 07:10:08