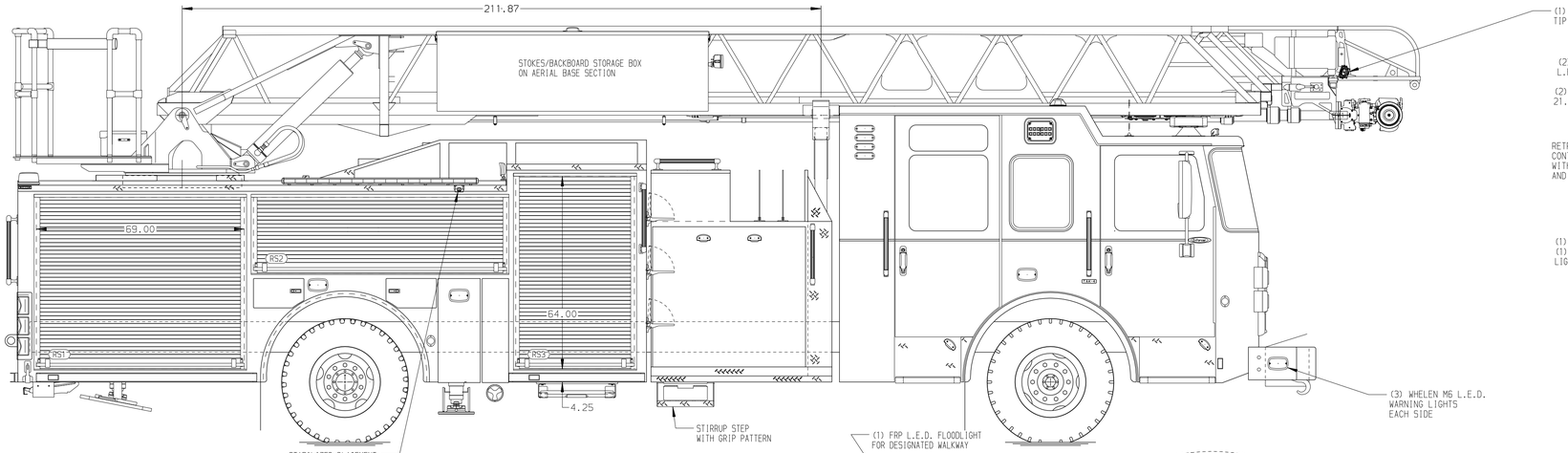

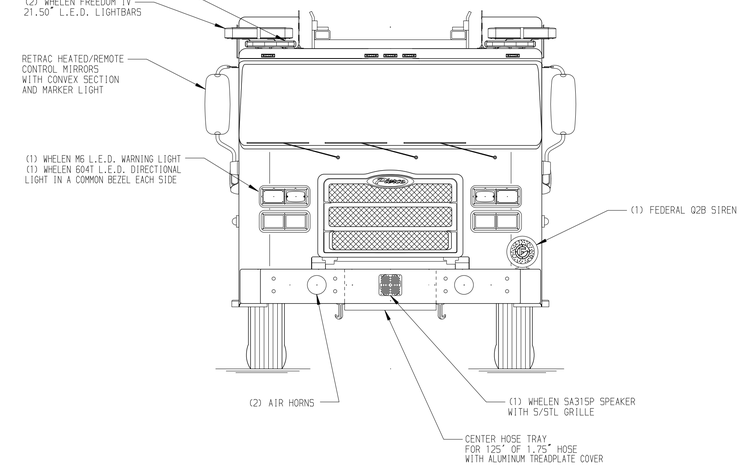

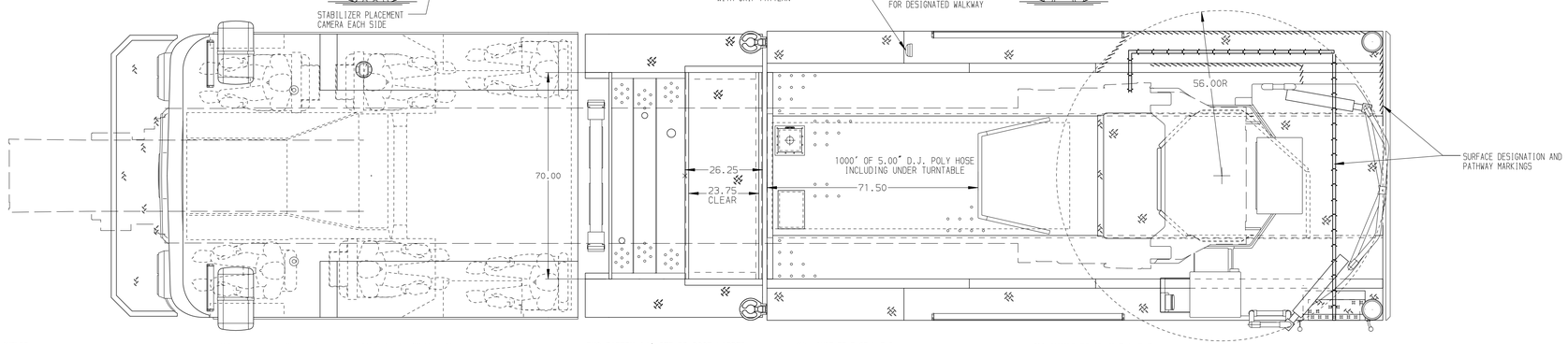

BODY	WATER TANK
107' ASL Aluminum Body	500 Gallon Poly Water Tank
COMPT,LEFT SIDE FRONT	Foam System
Full Height Rollup Forward	Plumbing for Future Husky Foam System
COMPT,LEFT SIDE REAR	Foam Cell
Full Height Rollup Rearward	20 Gallon Foam Cell, Non Reduced Water
COMPT,RIGHT SIDE FRONT	
Full Height Rollup Forward	
COMPT,RIGHT SIDE REAR	
Full Height Rollup Rearward	

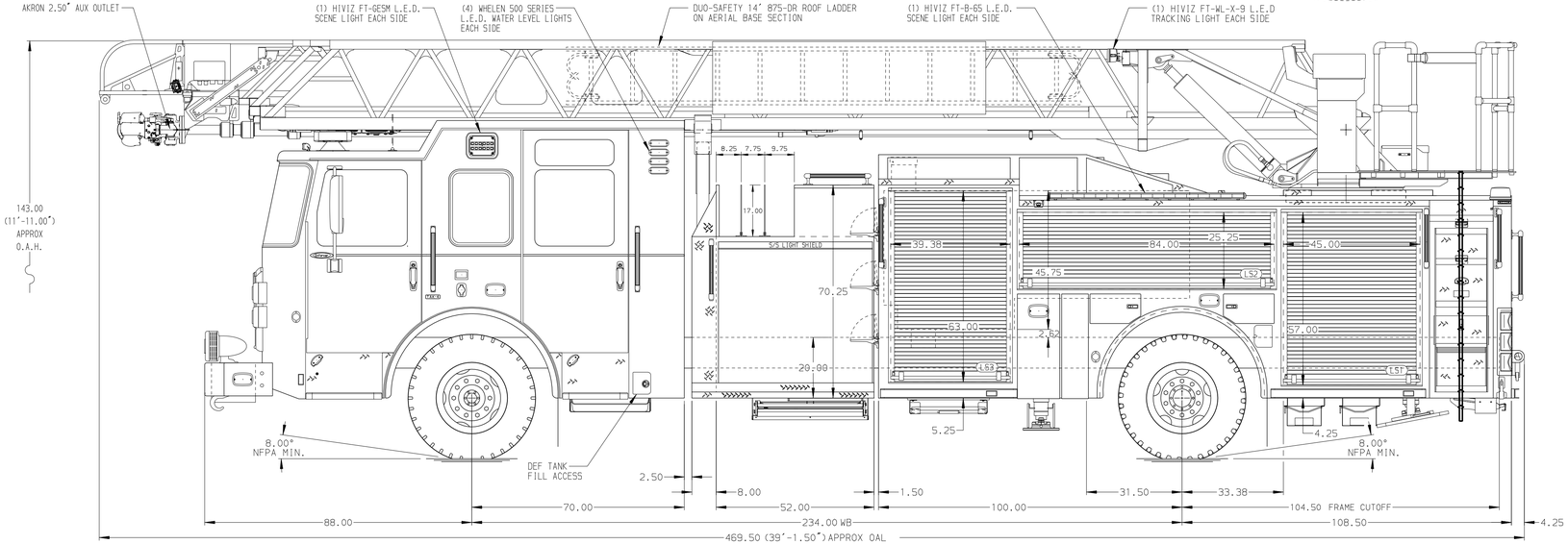

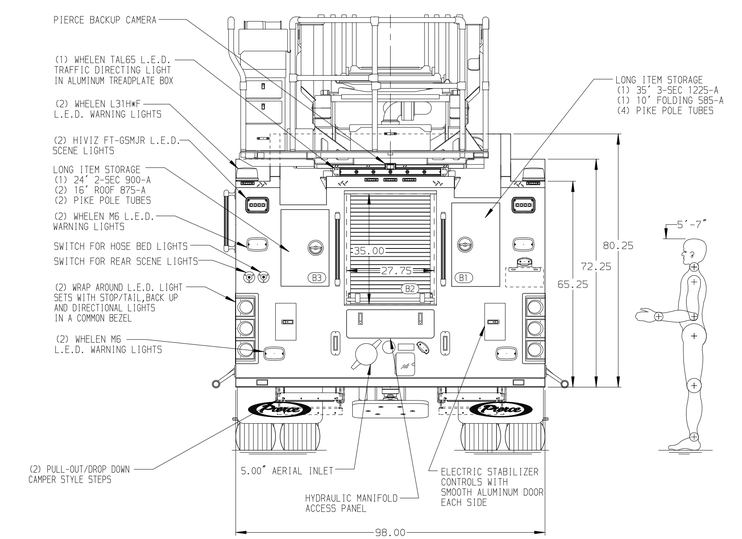

CHASSIS	CAB	AXLE,FRONT,CUSTOM	TRANSMISSION	PUMPHOUSE	CROSSLAYS,1.50"	SPEEDLAYS	SAFETY
Enforcer Chassis	7010 Enforcer Notched Cab	22,800 Lb TAK-4 Axle	Allison 6th Gen, 4000 EVS P	52" Control Zone Side Mount	(2) 1.50" Standard Capacity	Speedlays Not Required	Side Roll and Frontal Impact Protection
ENGINE	BUMPER	AXLE,REAR		PUMP	CROSSLAYS,2.50"	GENERATOR	
510 HP Paccar MX13 Engine	19" Extended Painted Steel	33,500 Lb Meritor Axle		2000 GPM Waterous CSU	(1) 2.50" Standard Capacity	Generator Not Required	

CUSTOMER APPROVAL

APPROVED BY: _____

DATE: _____

Pierce MANUFACTURING INC.

NOTE

DIMENSIONS SHOWN ARE APPROXIMATE AND ARE SUBJECT TO MINOR DEVIATIONS AS MAY OCCUR OR BE NECESSARY IN CONSTRUCTION.
MINOR DETAILS NOT SHOWN.

1. SHORELINE RECEPTACLE WITH KUSSMAUL SUPER AUTO-EJECT LOCATED ON DRIVER SIDE OF THE CAB
2. AIR INLET WITH DISCONNECT COUPLING LOCATED FORWARD IN THE DRIVER SIDE STEPWELL
3. BATTERY CHARGER LOCATED BEHIND DRIVERS SEAT
4. BATTERY CHARGE INDICATOR LOCATED ON DRIVERS SIDE OF CAB
5. ONE 1.50" OUTLET WITH 2.00" PIPING AND SWIVEL LOCATED IN CENTER BUMPER TRAY
6. SIX ADJUSTABLE SHELVES LOCATED IN COMPARTMENTS PER ORDER
7. THREE FLOOR MOUNTED SLIDE-OUT TRAYS LOCATED IN COMPARTMENTS PER ORDER
8. ONE CTECH CABINET LOCATED IN COMPARTMENT PER ORDER
9. ONE RECEPTACLE LOCATED IN COMPARTMENT PER ORDER
10. TWO RECEPTACLE STRIPS LOCATED IN COMPARTMENTS PER ORDER
10. ONE ALUMINUM SWING-OUT TOOLBOARD LOCATED IN COMPARTMENT PER ORDER
11. ONE VERTICAL PARTITION LOCATED IN COMPARTMENT PER ORDER
12. ONE PEGBOARD MOUNTED ON COMPARTMENT BACK WALL LOCATED PER ORDER
13. DUAL L.E.D. LIGHT STRIPS LOCATED IN COMPARTMENTS PER ORDER
14. NON-RAISED AERIAL PEDESTAL
15. 1500 GPM HIGH FLOW WATERWAY
16. LIMITED RETRACTION NOT REQUIRED
17. RUNG LIGHTING ON AERIAL LADDER

REV	DATE	BY	CH
-	-	-	-

CHASSIS DATA — MAKE: PIERCE — MODEL: ENFORCER

TITLE: 107' ASCENDANT AERIAL LADDER AND BODY ASSEMBLY

FOR: PIERCE FIELD UNIT, APPLETON, WI

DWG NO.: 42178AD

JOB NO.	42178
SCALE	1:24
DATE	
DRAWN BY	ANZ
30JAN24	
CHECKED BY	THS
31JAN24	
SHEET SIZE	D
SHEET NO.	1 OF 1

View File Created 31-JAN-2024 10:08:31